Return
to Menu

Modular ICS 7.0
Installer Guide

Norstar and Meridian are trademarks of Nortel Networks
© Copyright Nortel Networks 2005

1-800-4 NORTEL
www.nortel.com/norstar

N0000619 03
Printed in Canada

Table of Contents

Regulations 21

North American Regulatory Information 21
Safety 21
Enhanced 911 Configuration 22
Telecommunication Registration 24
Network Connection 25
Canada and US 25
Hearing Aid Compatibility 25
Electromagnetic Compatibility 25
Telephone Company Registration 26
Use of a Music Source 26
Rights of the Telecommunications Company 26
Repairs 27
Canadian Regulations - please read carefully 28
Notice 28
Notice 29
US Regulations - please read carefully 30
Federal Communications Commission (FCC) Notice 30
Ringer Equivalence Number 31
Hearing Aids 32
Programming Emergency Numbers 32
EMI/EMC (FCC Part 15) 32
Important Safety Instructions 34
Installation 34
Use 35
International Regulatory Information 37
Safety 39
Additional Safety Information 40
Limited Warranty 42
Exclusions 42
Warranty Repair Services 43
After Warranty Service 43

How to use this document 45

What's new with Norstar 47

Features from 6.1MR addendum 47
New features and hardware for version 7.0 48
Changes for version 7.0 50

Welcome to ISDN 53

Comparing ISDN to Analog 54
Type of ISDN service 54
B channels 55
D channels 55
ISDN layers 55
ISDN bearer capability 56
Services and features for ISDN PRI and BRI 57
PRI services and features 57
BRI services and features 58
Feature descriptions 59
Network name display 59
Message Waiting Indicator (MWI) 60
Name and number blocking 60
External call forwarding 61
MCDN trunk features 61
Call by Call service selection for PRI 61
Emergency 911 dialing 62
MCID (Profile 2) 63
Network Call Diversion (Profile 2) 63
DTI card configured as a PRI card 64
ISDN hardware 64
DTI card configured as PRI 64
BRI Card 65
BRI-U2 and BRI-U4 card 65
BRI-ST card 65
U-LT reference point 66
U-NT reference points 66
S reference point 67
T reference points 68
Clock source for ISDN cards 69
Other ISDN BRI equipment: NT1 70
ISDN standards compatibility 71

Working with ISDN 73

Planning your ISDN network 73
Ordering ISDN PRI 73
Ordering ISDN PRI service in Canada 73
Ordering ISDN PRI service in United States 74
Ordering ISDN BRI 74
Ordering service in Canada 74
Ordering ISDN service in the U.S. 74
Supported ISDN protocols 76
ISDN programming 76
Programming ISDN PRI resources 77
Programming ISDN BRI resources 78
Programming ISDN PRI lines 81
Programming ISDN BRI lines 81
Programming Direct Inward System Access (DISA) on PRI trunks 82
Programming ISDN equipment 83
Terminal equipment for BRI cards 83
Devices on an S or LT loop (BRI cards only) 83
ISDN router 86
D-packet service (BRI cards only) 86
POSTA for ISDN BRI 87
Point-of-sale terminal adapter 88

Trunks and target lines 89

Trunk operating modes (T1) 90
Ground start trunks (T1 only) 90
DID trunks 91
Analog loop start trunks 93
Analog E&M trunks 95
BRI trunks 97
PRI trunks 97
Target lines 98

Remote system access 99

Use system features during a remote call 99
Remote access on loop start and E&M trunks 100
Remote access on a private network 100
Remote access on Direct Inward Dial (DID) trunks 101
Remote access on PRI trunks 101

Controlling system access 103

Class of Service 103
Restriction filters 104
Direct inward system access (DISA) 106

Networking with Norstar 109

Tie-line networking 110
Norstar behind a PBX 111
Dialing plans 112
Dialing plan using public lines 114
Destination code numbering in a network 114
Dialing plan using E&M lines 115
Dialing plans with shared line pools 119
Call-by-Call Services Example 121
Norstar Configuration 123
PRI dialing plan example for two-way DID 125
Static DID and two-way DID 126
Private networking using PRI SL-1 127
SL-1 networking features 127
Features specific to Advanced Private Network 128
Private Network Tandem calling 129
Calls originating from the public network 130
Calls originating in the private network 133
Routing for tandem networks 136
Advanced Private Networking 138
Networking using routing codes 138
MCDN Private Networking 144
Using a UDP dialing plan 145
Using a CDP dialing plan 148
MCDN trunk call features 151
Network Call Redirection Information 152
ISDN Call Connection Limitation 154
Trunk Route Optimization 156
Trunk Anti-tromboning 158
MCDN voice mail/auto attendant call features 160
MCDN Meridian 1 attendant MCDN features 160
Message Waiting Indication 161
Camp-on 162
Break-in 164
Central voice mail and Auto Attendant with Norstar 166

Configuring centralized voice mail 167
Local system 167
Remote system 168
Using centralized voice mail 170
Configuring Centralized Auto Attendant (CAA) 170
Assigning PNIs 171
Assigning PNIs for adjacent nodes 171
Local system 172
Remote system 173
Voice mail configuration 175
Customer Use 176
Public network 176
Call one or more Norstar telephones 176
Call Norstar and select tie lines to a private network 177
Call Norstar and select lines to the public network 179
Private network 180
Call one or more Norstar telephones 180
Use tie lines to other nodes in the private network 181
Select lines to the public network 182
Select E&M trunks to the private network 183
Norstar Line Redirection feature 184
ETSI, MCDN and Network features 186
Network Call Diversion 186
Allowing NCD 187
Feature description 187
Programming and restrictions 188
Selective Line Redirection 189
Programming Extensions 189
Enhanced Caller ID 189
Malicious caller identification (MCID) 190
Programming MCID capability 191

Data Solutions 193

Examples of ISDN Scenarios 193
ISDN applications 193

Planning the installation 195

Planning checklist 196
Hardware 196
Initial configuration 196
System configuration 197

Required equipment 197
Expansion equipment 198
Optional equipment 199
Equipment for installing the ICS and modules 200
Location requirements 200
Electrical requirements 202
Configuring Trunk Cartridges 203
Configuring Station Modules 203
Internal wiring requirements 204
Norstar loop 204
ISDN S reference point (S Loop) 204
System overview 206
Upgrading your Norstar system 207
Supported upgrades in MICS 7.0 208
Upgrade systems previous to MICS 6.1 to 7.0 using the upgrade tool 210
Using the upgrade too to upgrade to version 4.1 211
Using the upgrade tool to upgrade to version 6.1 212
Upgrade from version 6.1 or 6.1MR to version 7.0 213
Upgrading from MICS 7.0 to MICS-XC 7.0 214
Trunk and Station Modules 217
Global Analog Trunk Cartridge/CLI Cartridge 217
Off-core DTI card 218
Replacing a Modular 8x24 KSU 219
Trunk module line numbering 223
Upgrading ILG functionality with hunt groups 224
Planning Hospitality functions 225

Installation 227

Installation checklist 228
Testing the ISDN BRI network connection 230
Installing the cartridges 231
Mounting the modules 233
Installation tips 235
Installing the ROM Software Cartridge 237
Inserting a cartridge 239
Terminating resistors on BRI-ST Cards 240
Shorting straps on a BRI-ST card 241
Connecting expansion modules 242
Order of connection 242
Analog Station Module 242

Installing fiber cables 248
Fiber cable management system 249
Using the fiber cable management system 250
Using the fiber spool 252
Making fiber connections 253
Routing fiber cables 254
Connecting the wiring 255
Connecting the wiring to the distribution panel 255
Wiring charts 260
Port numbering on the wiring charts 260
Integrated Communications System (ICS) 260
BRI Wiring charts 269
Wiring the BRI network interface 276
DTI wiring 278
E&M/DISA Trunk Cartridge wiring chart 282
DID supervisory signaling 285
Emergency transfer conditions 285
Emergency telephone 291
Moving telephones 293
Installing ISDN BRI terminal equipment 294
S or T wiring for terminal equipment 294
S or T extension wiring configurations 295
Additional power 295
U-LT wiring for terminal equipment 296
Installing optional equipment 297
Auxiliary ringer (customer supplied) 297
Auxiliary ringer programming 297
External music source (customer supplied) 298
External music source programming 298
External paging system (customer supplied) 299
Powering up the system 300
Check the power 301

Programming 303

Programming overview 304
Profile, Dialpad and Startup programming 305
Installer or System Coordinator Plus programming 306
System Coordinator programming 307
Admin/Basic programming 307
Programming tools 309

The programming overlay 309
Using the telephone buttons for programming 310
Special characters on the display 312
The display buttons 312
The Norstar Programming Record 313
Exiting 313
Viewing your programming updates 314
Entering numbers 314
Viewing long telephone numbers 314
Setting up User Preferences 315
Copying telephone programming 316
System ID 319
Reviewing programmed settings 319
Viewing the programming for a telephone 320
Viewing the programming for a line 320
Programming sequence 321
Profiles and Dialpads 322
Profile programming 322
Profile parameters 322
Changing the profile 325
Dialpad programming 326
Startup programming 327
Performing Startup 327
Changing the default telephony template 328
Changing the starting DN 329
Programming 331
Entering programming for installers 332
Entering programming for system coordinators 333
Entering programming using other passwords 334
Terminals&Sets 335
Line access 335
Line assignment 336
Appearances 337
Line pool access 339
Prime line 340
Intercom keys 341
Answer DNs 342
OLI # 343
Capabilities 345
Name 348
User prefernces 348

Restrictions 349
Filters 349
Default filters 351
Set restrns 354
Filters 354
Set lock 355
Allow last no 355
Allow saved no 355
Allow link 355
Line/set restrns 356
Telco features 357
Feature assignment (CLID alignment) 357
Caller ID set 357
Call log set 358
Extl VMsg set 358
1stDisplay 359
Called ID 359
Log space 360
Lines 361
Trunk/Line data 361
Copying Trunk and Line data 363
Trunk type 363
Line type 364
Line connected to a DTI 365
Dial mode 366
Rec'd # 367
If busy 367
Prime set 368
Auto privacy 368
Trunk mode 369
Ans mode 369
Ans with DISA 370
Link at CO (loop trunks only) 371
Aux. ringer 371
Full AutoHold 372
LossPkg 372
Signal 373
ANI Number 374
DNIS Number 374
Gain 375
Programming distinctive ring patterns 376
Name 377

Restrictions 378
Restrn filters 378
Line restrns 378
Remote restrns 379
Telco features 380
VMsg center 1 380
Services 381
Common settings 382
Control sets 382
Schedule names 383
Schedule times 383
Ringing service 385
Ringing groups 385
Sched:Night 386
Service 386
Trunk answer 386
ExtraDial telephone 387
Line settings 387
Restrn service 389
Routing service 389
Routes and destination codes 391
Routes 391
DialOut 392
Use Pool 392
Routing table 393
Programming the PRI routing table 394
Dest codes 395
Wild card character 396
Normal rte 398
Digit Absorption 398
Setting up a route for local calling 399
Setting up a route for long distance calling 401
Configuring the second dial tone table 403
Adding a long distance carrier access code 404
Programming for least cost routing 406
Multiple least cost routing 407
Sched:Night 408
Using dialing restrictions with routing 410
Sys speed dial 411
Passwords 412
COS pswds 412
Pswd 413

User flt 413
Line flt 413
Remote pkg 414
Call log pswds 414
Progrming pswds 415
Installer 415
SysCoord+ 416
SysCoord 416
Basic 416
Hospitality password 416
Desk pswd 417
Cond pswd 417
Silent Monitor password 418
Time&Date 419
System prgrming 420
Hunt groups 420
Adding or removing members from a group 421
Moving members of a group 423
Assigning or unassigning lines to a group 423
Setting the distribution mode 424
Setting the hunt delay 425
Programming busy line setting 425
Programming the queue timeout 426
Programming the overflow set 426
Setting the Hunt group name 427
Allowing/disallowing an auxiliary ringer 427
Assigning a distinctive ring pattern to a Hunt Group 428
Monitoring Hunt groups 429
Change DNs 430
Featr settings 430
Backgrnd music 430
On hold 431
Receiver volume 431
Camp timeout 431
Park timeout 432
Park mode 432
Trnsfr callbk 432
DRT to prime 433
DRT delay 433
Held reminder 433
Remind delay 434
Directd pickup 434

Page tone 434
Page Timeout 435
Daylight time 435
AutoTime&Date 435
Call log 436
Call log space 437
Host delay 438
Link time 438
AlarmSet 439
Set relocation 439
Msg reply enh 440
Answer key 441
Setting SWCA controls 442
CLID match 446
Silent Monitor 446
Direct-dial 447
D-Dial1 447
Intrnl/Extrnl# 448
Line selection 448
CAP/KIM assign 449
Dialing Plan 450
DN lengths (enbloc dialing) 451
Private networks 452
Public networks 453
Dial Timeout 454
Access codes 455
Line pool codes 455
Park prefix 457
External code 458
Direct-dial # 458
Auto DN 459
DISA DN 459
PrivAccCode 460
Carrier Codes 461
Remote access 462
Rem access pkgs 462
Rem line access 462
Rec'd # length 464
DN length 464
Nat'nl length (profile 2, only) 466
Make/Break (profile 2, only) 466
BusName 466

Receiving and Sending Calling Party Name 467
Receiving and Sending Connected Name 468
Network Name Display interactions 468
Programming Network Name Display 469
Outgoing Name and Number Blocking 470
Call by Call service for PRI 471
Line Pools 474
Programming Call by Call service selection 474
PRI Call by Call Limits 474
Programming Call by Call Limits 475
Release Reasons 476
Programming Hospitality Services 477
Room/desk information 477
Call restrns 478
Setting Service times 479
Configuring alarms and expired alarms settings 479
SM sets 480
Network Services 481
ETSI: Network diversion and MCID 481
Network Call Diversion 482
Malicious call identification (MCID) 485
MCDN services (profiles 1, 2, 4) 486
Telco features 487
VMsg ctr tel#s 487
Outgoing Name and Number Blocking 488
Programming the analog vertical service code (VSC) 489
Programming the BRI VSC 489
Setting up the modules for ONN blocking 490
Program ONN blocking BRI loop state 491
Software keys 492
ISDN-PRI 492
MCDN 492
System Identification Number 493
Call the Nortel Customer Response Center 493
Entering the software keys 494
Hardware 495
Show module 495
Cards on KSU 495
Provisioning the DTI card for PRI 496
Selecting a protocol 497
BchanSeq 498

Call-by-call routing 498
Discon timer 500
Answer timer 500
CO fail 501
I/F levels 501
Framing 502
Internal CSU 503
CSU line bld 503
Line coding 504
ClockSrc 505
Max transits 505
Modules 505
StnMod 505
ASM 506
TrunkMod 507
BRI card 511
Loop 511
Type 511
Lines 511
No SPIDs assignd 512
# of B-channels 512
Network DNs 513
Call type 513
D-packet servce 514
Lp 514
TEIs 515
No TEIs on loop 515
Sampling 515
DNs on Loop 516
Assign DNs 516
Loop DN 516
Clock Src 517
Setting the clock source for DTIs and PRI 521
T1 or ISDN-PRI configurations 523
Send Name Display (PRI) 524
DataMod 525
Type 525

Maintenance 527

Beginning a Maintenance session 528
System version 529
Checking the version of the system 529

Port/DN status 530
Identifying a connected device 531
Displays 532
Checking the device version number 533
Checking the state of the device 534
Disabling a device 535
Displays 535
Enabling the device 536
Returning to the beginning 536
Module status 537
Looking at the module inventory 537
Checking the number of Cartridges 538
Checking the state of a module 538
Checking the state of a cartridge 539
Disabling a module or its cartridges 539
Enabling a module or its cartridge 540
Returning to the beginning 540
System test log 541
Checking the items in the log 541
Checking the current alarm 542
Checking when each item occurred 542
Checking consecutive repetitions of an event or alarm 542
Erasing the log 543
System administration log 544
Checking the items in the log 544
Checking the current alarm 545
Checking when each item in the log occurred 545
Erasing the log 545
Network evt log 546
Checking the items in the log 546
Checking the current alarm 546
Erasing the log 547
Checking when each item in the log occurred 547
Alarm codes 548
If you see an alarm code 549
Alarm troubleshooting 551
Event messages 555
Dealing with event messages 555
Significant event messages 556
Event message 799 559

Displays 560
Provisioning BRI and PRI lines 563
BRI and T1 lines 563
Cd1-ICS 563
L001 564
Provisioning a T1 line 564
Provisioning a PRI line 564
Deprovisioning a line 565
Disabling a PRI Channel 565
Tests 566
Loopback tests for T1 or ISDN-PRI lines 566
Tests initiated from Norstar 570
Tests initiated by the central office 570
Starting a loopback tests 571
Operating a Continuity loopback test 572
Loopback test for BRI lines 572
Operating a payload loopback test 573
CSU stats 574
Statistics 574
Checking the performance statistics 575
Checking the CSU alarms 577
Checking active alarms 577
Checking carrier failure alarms 577
Checking bipolar violations 578
Checking short term alarms 578
Checking defects 578
Resetting all statistics 579
Diagnostic tools 580
Link Status 581
Working with fractional PRI 581

Usage Metrics 583

Hunt groups 583
Call-by-Call 584
Clearing the metrics 585

Troubleshooting 587

Getting ready 588
Types of problems 589
Misunderstanding a feature 589

Programming errors 589
Wiring connections 589
Equipment defects 589
General troubleshooting procedure 590
Problems with telephones 591
Set has faulty buttons, display, handset or other hardware problems 591
Unreadable set display 591
Telephone dead 592
Running a Maintenance session to test a dead telephone 593
Replacing a telephone 593
Emergency telephone dead 594
Problems with lines 596
Calls cannot be made (but can be received) 596
Dial tone absent on external lines 597
Hung lines at a telephone 598
Auto-answer line rings at a telephone 599
Prime telephone gets misdialed calls 601
Selected lines read Not in service or Not available 602
Selected line pool displays: No free lines 604
Problems with optional equipment 606
Analog Terminal Adapter 606
Running a Maintenance session to test an ATA 606
Auxiliary ringer 607
External paging 608
Music on Hold/Background Music trouble 608
KIM not working 609
Cold starting the KIM 609
Problems with trunk cartridges service 611
Digital Trunk Interface trouble 612
Monitoring the T1 or PRI signal 614
Problems with BRI service 615
The BRI card is connected to the ISDN network (U loop) but the LED for one of more loops is not lit 615
Solution 615
Out of service displays when a BRI is selected (LED for loop is lit) 616
All the LEDs on a BRI Card are flashing 616
Caller hears one ring and then a fast busy signal when placing a call on a BRI line 617

ICS down 618
Trunk or Station Module down 619
Data Module down 620
Problems for network or remote users 621
Remote feature code gets no response 621
Dialed number gets ringback and the wrong person 622
Dialed number gets stuttered dial tone instead of ringback 623
Dialed number gets dial tone instead of ringback 623
Dialed number gets busy tone 624
Dialed number does not get through 624
Dialed DISA number gets ringback instead of stuttered dial tone 627
Dialed DISA number gets dial tone instead of stuttered dial tone 627
DISA user gets overflow tone when entering COS password 628
Dialed feature code gets overflow tone 630
Dialed feature code gets busy tone 631
Line pool access code gets overflow tone 631
Line pool access code gets ringback 632
Line pool access code gets busy tone 633
Dialed number gets no response 634

Specifications 635

Norstar system 635
Digital Trunk Interface 637

Glossary 639

Index 659

Regulations

North American Regulatory Information

Safety

This equipment meets all applicable requirements of both the CSA C22.2 No.60950 and UL 60950.

The shock hazard symbol within an equilateral triangle is intended to alert personnel to electrical shock hazard or equipment damage. The following precautions should also be observed when installing telephone equipment.

Never install telephone wiring during a lightning storm.

Never install telephone jacks in wet locations unless the jack is specifically designed for wet locations.

Never touch uninsulated telephone wires or terminals unless the telephone line has been disconnected at the network interface.

Use caution when working with telephone lines.

DANGER: Risk of shock.
Read and follow installation instructions carefully.

Ensure the system and system expansion units are unplugged from the power socket and that any telephone or network cables are unplugged before opening the system or system expansion unit.
If installation of additional hardware and /or servicing is required, disconnect all telephone cable connections prior to unplugging the system equipment.
Ensure the system and system expansion units are plugged into the wall socket using a three-prong power cable before any telephone cables are connected.

The exclamation point within an equilateral triangle is intended to alert the user to the presence of important operating and maintenance (servicing) instructions in the literature accompanying the product.

CAUTION: Only qualified persons should service the system.

The installation and service of this hardware is to be performed only by service personnel having appropriate training and experience necessary to be aware of hazards to which they are exposed in performing a task and of measures to minimize the danger to themselves or other persons.
Electrical shock hazards from the telecommunication network and AC mains are possible with this equipment. To minimize risk to service personnel and users, the system must be connected to an outlet with a third-wire ground. Service personnel must be alert to the possibility of high leakage currents becoming available on metal system surfaces during power line fault events near network lines. These leakage currents normally safely flow to Protective Earth ground via the power cord. Therefore, it is mandatory that connection to an earthed outlet is performed first and removed last when cabling to the unit. Specifically, operations requiring the unit to be powered down must have the network connections (central office lines) removed first.

Enhanced 911 Configuration

CAUTION: Warning

Local, state and federal requirements for Emergency 911 services support by Customer Premises Equipment vary. Consult your telecommunication service provider regarding compliance with applicable laws and regulations.

For information about 911 configuration, refer to the Enhanced 911 (E911) Configuration section in the Business Communications Manager Programming Operations Guide or to the Emergency 911 dialing section in the Modular ICS Installer Guide.

Radio-frequency Interference

WARNING: Equipment generates RF energy.

This equipment generates, uses, and can radiate radio-frequency energy. If not installed and used in accordance with the installation manual, it may cause interference to radio communications. It has been tested and found to comply with the limits for a Class A computing device pursuant to Part 15 of the FCC Rules and with ICES.003, CLASS A Canadian EMI Requirements. Operation of this equipment in a residential area is likely to cause interference, in which case the user, at his or her own expense, will be required to take whatever measures may be required to correct the interference.

Telecommunication Registration

This equipment meets all applicable requirements of both Industry Canada and US Federal Communications Commission and has been registered under files Industry Canada 332D-5980A and FCC US: AB6KF15B20705 (key system), US: AB6MF15B20706 (hybrid system), and US: AB6PF15B23740 (PBX system). Connection of this telephone system to the nationwide telecommunications network is made through a standard network interface jack that you can order from your local telecommunications company. This type of customer-provided equipment cannot be used on party lines or coin lines.

Before installing this equipment, users should ensure that it is permissible to be connected to the facilities of the local telecommunications company. The equipment must also be installed using an acceptable method of connection. The customer should be aware that compliance with the above conditions may not prevent degradation of service in some situations.

Repairs to certified equipment should be made by an authorized maintenance facility designated by the supplier. Any repairs or alterations made by the user to this equipment, or equipment malfunctions, may give the telecommunications company cause to request the user to disconnect the equipment. Users should ensure for their own protection that the electrical ground connections of the power utility, telephone lines and internal metallic water pipe system, if present, are connected together. This precaution may be particularly important in rural areas.

CAUTION: Users should not attempt to make such connections themselves, but should contact the appropriate electric inspection authority, or electrician.

Network Connection

Canada and US

Table 1 Interface harmonized standards

Interface	Harmonized Standard	Description
CTM	Industry Canada CS03 FCC Part 68/TIA-968-A	Analog terminal device
DTM	Industry Canada CS03 FCC Part 68/TIA-968-A	T1 and Primary Rate ISDN
BRIM	Industry Canada CS03 FCC Part 68/TIA-968-A	Basic Rate ISDN
WAN	Industry Canada CS03 FCC Part 68/TIA-968-A	T1

Hearing Aid Compatibility

System telephones are hearing-aid compatible, as defined in Section 68.316 of Part 68 FCC Rules.

Electromagnetic Compatibility

This equipment meets all FCC Part 15, Class A radiated and conducted emissions requirements.

This equipment does not exceed the Class A limits for radiated and conducted emissions from digital apparatus as set out in the Radio Interference Regulations of Industry Canada.

Telephone Company Registration

It is usually not necessary to call the telecommunications company with information on the equipment before connecting the system to the telephone network. If the telecommunications company requires this information, provide the following:

- telephone number(s) to which the system will be connected
- FCC registration number (on label affixed to the system)
- universal service order code (USOC)
- service order code (SOC)
- facility interface code (FIC)

Use of a Music Source

In accordance with U.S. Copyright Law, a license may be required from the American Society of Composers, Authors and Publishers, or similar organization if Radio or TV broadcasts are transmitted through the Music On Hold or Background Music features of this telecommunication system.

Nortel Networks hereby disclaims any liability arising out of the failure to obtain such a license.

Rights of the Telecommunications Company

If the system is causing harm to the telephone network, the telecommunications company may discontinue service temporarily. If possible, the telecommunications company will notify you in advance. If advance notice is not practical, the user will be notified as soon as possible. The user will be given the opportunity to correct the situation and informed of the right to file a complaint to the FCC.

The telecommunications company may make changes in its facilities, equipment, operations or procedures that could affect the proper functioning of the system. If this happens, the telecommunications company will give you advance notice in order for you to make any necessary modifications to maintain uninterrupted service.

Repairs

In the event of equipment malfunction, all repairs to certified equipment will be performed by an authorized supplier.

Canadian Regulations - please read carefully

Notice

The term *IC* before the certification number located on the host equipment only signifies that the Industry Canada technical specifications were met. The Department does not guarantee the equipment will operate to the user's satisfaction. Before installing this equipment, users should ensure that it is permissible to be connected to the facilities of the local telecommunications company. The equipment must also be installed using an acceptable method of connection. The customer should be aware that compliance with the above conditions may not prevent degradation of service in some situations. Repairs to certified equipment should be coordinated by a representative designated by the supplier. Any repairs or alterations made by the user to this equipment, or equipment malfunctions, may give the telecommunications company cause to request the user to disconnect the equipment. Users should ensure for their own protection that the electrical ground connections of the power utility, telephone lines and internal metallic water pipe system, if present, are connected together. This precaution may be particularly important in rural areas.

CAUTION: Users should not attempt to make such connections themselves, but should contact the appropriate electric inspection authority, or electrician, as appropriate.

Notice

The Ringer Equivalence Number (REN) assigned to each terminal device provides an indication of the maximum number of terminals allowed to be connected to a telephone interface. The termination on an interface may consist of any combination of devices subject only to the requirement that the sum of the RENs of all the devices does not exceed 5.

This Class A device complies with ICES-003 Class A Canadian EMI requirements. Operation is subject to the following two conditions (1) This device may not cause harmful interference and (2) this device must accept any interference received, including interference that may cause undesired operation.

Do not attempt to repair this equipment. If you experience trouble, write for warranty and repair information:

Nortel Networks
30 Norelco Drive, Weston, Ontario
M9L 2X6 Canada

US Regulations - please read carefully

Federal Communications Commission (FCC) Notice

FCC registration number: This telephone equipment complies with Rules and Regulations, of the FCC (TIA-968-A) for direct connection to the Public Switched Telephone Network. (The FCC registration number appears on a sticker affixed to the bottom of the telephone.)

Your connection to the telephone line must comply with these FCC rules:

- An FCC compliant telephone cord and modular plug is provided with this equipment. This equipment is designed to be connected to the telephone network premises wiring using a compatible modular jack which is compliant. See installation instructions for details.
- Use only an TIA-968-A-compliant Universal Service Order Code (USOC) network interface jack, as specified in the installation instructions, to connect this telephone to the telephone line. (To connect the phone, press the small plastic tab on the plug at the end of the phone's line cord. Insert into a wall or baseboard jack until it clicks. To disconnect, press the tab and pull out.) See installation instructions for details.
- If the terminal equipment causes harm to the telephone network, the telephone company will notify you in advance that temporary discontinuance of the product may be required. But if advance notice isn't practical, the telephone company will notify you as soon as possible. You will also be advised of your right to file a complaint with the FCC, if you believe it is necessary.

- If a network interface jack is not already installed in your location, you can order one from your telephone company. Order the appropriate USOC Network interface jack, as specified in the installation instructions, for wall-mounted telephones or for desk/table use. In some states, customers are permitted to install their own jacks.
- Your telephone may not be connected to a party line or coin telephone line. Connection to Party Line Service is subject to state tariffs. (Contact the state public utility commission, public service commission or corporation commission for information.)
- It is no longer necessary to notify the Telephone Company of your phone's Registration and REN numbers. However, you must provide this information to the telephone company if they request it. The telephone company may make changes in its facilities, equipment, operation or procedures that could affect the operation of the equipment. If this happens the telephone company will provide advance notice in order for you to make necessary modification to maintain uninterrupted service.
- Do not attempt to repair this equipment. If you experience trouble, write for warranty and repair information:

  Nortel Networks
  640 Massman Drive,
  Nashville, TN, 37210, USA

Ringer Equivalence Number

The FCC Registration label (on bottom of phone), includes a Ringer Equivalence Number (REN), which is used to determine the number of devices you may connect to your phone line. A high total REN may prevent phones from ringing in response to an incoming call and may make placing calls difficult. In most areas, a total REN of 5 should permit

normal phone operation. To determine the total REN allowed on your telephone line, consult your local telephone company.

Hearing Aids

This phone is compatible with hearing aids equipped with an appropriate telecoil option.

Programming Emergency Numbers

When programming emergency numbers and/or making test calls to emergency numbers:

1. Remain on the line and briefly explain to the dispatcher the reason for calling before hanging up.
2. Perform such activities in the off-peak hours, such as early mornings or late evenings.

EMI/EMC (FCC Part 15)

Note: This equipment has been tested and found to comply with the limits for a Class A digital device, pursuant to Part 15 of the FCC Rules. These limits are designed to provide reasonable protection against harmful interference in a residential installation. This equipment generates, uses and can radiate radio frequency energy and, if not installed and used in accordance with the instructions, may cause harmful interference to radio communications. However, there is no guarantee that interference will not occur in a particular installation. If this equipment does cause harmful interference to radio or television reception, which can be determined by turning the equipment off and on, the user is encouraged to try to correct the interference by one or more of the following measures:

- Reorient or relocate the receiving antenna.
- Increase the separation between the equipment and receiver.
- Connect the equipment into an outlet on a circuit different from that to which the receiver is connected.
- Consult the dealer or an experienced radio/TV technician for help.

Changes or modifications not expressly approved by the party responsible for compliance could void the user's authority to operate the equipment.

Important Safety Instructions

The following safety instructions cover the installation and use of the Product. Read carefully and retain for future reference.

Installation

WARNING: To avoid electrical shock hazard to personnel or equipment damage observe the following precautions when installing telephone equipment:

1. Never install telephone wiring during a lightning storm.
2. Never install telephone jacks in wet locations unless the jack is specifically designed for wet locations.
3. Never touch uninsulated telephone wires or terminals unless the telephone line has been disconnected at the network interface.
4. Use caution when installing or modifying telephone lines. The exclamation point within an equilateral triangle is intended to alert the user to the presence of important operating and maintenance (servicing) instructions in the literature accompanying the product.

   This symbol on the product is used to identify the following important information: Use only with a CSA or UL certified CLASS 2 level C power supply, as specified in the user guide.

Use

When using your telephone equipment, basic safety precautions should always be followed to reduce risk of fire, electric shock and injury to persons, including the following:

1. Read and understand all instructions.
2. Follow the instructions marked on the product.
3. Unplug this product from the wall outlet before cleaning. Do not use liquid cleaners or aerosol cleaners. Use a damp cloth for cleaning.
4. Do not use this product near water, for example, near a bath tub, wash bowl, kitchen sink, or laundry tub, in a wet basement, or near a swimming pool.
5. Do not place this product on an unstable cart, stand or table. The product may fall, causing serious damage to the product.
6. This product should never be placed near or over a radiator or heat register. This product should not be placed in a built-in installation unless proper ventilation is provided.
7. Do not allow anything to rest on the power cord. Do not locate this product where the cord will be abused by persons walking on it.
8. Do not overload wall outlets and extension cords as this can result in the risk of fire or electric shock.
9. Never spill liquid of any kind on the product.
10. To reduce the risk of electric shock do not disassemble this product, but have it sent to a qualified service person when some service or repair work is required.

11. Unplug this product from the wall outlet and refer servicing to qualified service personnel under the following conditions:

    a When the power supply cord or plug is damaged or frayed.

    b If the product has been exposed to rain, water or liquid has been spilled on the product, disconnect and allow the product to dry out to see if it still operates; but do not open up the product.

    c If the product housing has been damaged.

    d If the product exhibits a distinct change in performance.

12. Avoid using a telephone during an electrical storm. There may be a remote risk of electric shock from lightning.

13. Do not use the telephone to report a gas leak in the vicinity of the leak.

14. **Caution:** To eliminate the possibility of accidental damage to cords, plugs, jacks, and the telephone, do not use sharp instruments during the assembly procedures.

15. **Warning:** Do not insert the plug at the free end of the handset cord directly into a wall or baseboard jack. Such misuse can result in unsafe sound levels or possible damage to the handset.

16. Save these instructions.

International Regulatory Information

CE	The CE Marking on this equipment indicates compliance with the following: This device conforms to Directive 1999/5/EC on Radio Equipment and Telecommunications Terminal Equipment as adopted by the European Parliament And Of The Council.	

This is a class A product. In a domestic environment this product may cause radio interference in which case the user may be required to take adequate measures.

Hereby, Nortel Networks declares that this equipment is in compliance with the essential requirements and other relevant provisions of Directive 1999/5/EC.

Information is subject to change without notice. Nortel Networks reserves the right to make changes in design or components as progress in engineering and manufacturing may warrant. This equipment has been tested and found to comply with the European Safety requirements EN 60950 and EMC requirements EN 55022 (Class A) and EN 55024. These EMC limits are designed to provide reasonable protection against harmful interference when the equipment is operated in a commercial and light industrial environment.

WARNING

This is a class A product. In a domestic environment this product may cause radio interference in which case the user may be required to take adequate measures. The above warning is inserted for regulatory reasons. If any customer believes that they have an interference problem, either because their Nortel Networks product seems to cause interference or suffers from interference, they should contact their distributor immediately. The distributor will assist with a remedy for any problems and, if necessary, will have full support from Nortel Networks.

Safety

WARNING!

Only qualified service personnel may install this equipment. The instructions in this manual are intended for use by qualified service personnel only.

Risk of shock.

Ensure the system is unplugged from the power socket and that any telephone or network cables are unplugged before opening the system.

Read and follow installation instructions carefully

Only qualified persons should service the system.

The installation and service of this hardware is to be performed only by service personnel having appropriate training and experience necessary to be aware of hazards to which they are exposed in performing a task and of measures to minimize the danger to themselves or other persons.

Electrical shock hazards from the telecommunication network and AC mains are possible with this equipment. To minimize risk to service personnel and users, the system must be connected to an outlet with a third-wire Earth.

Service personnel must be alert to the possibility of high leakage currents becoming available on metal system surfaces during power line fault events near network lines. These leakage currents normally safely flow to Protective Earth via the power cord. Therefore, it is mandatory that connection to an earthed outlet is performed first and removed last when cabling to the unit. Specifically, operations requiring the unit to be powered down must have the network connections (exchange lines) removed first.

Additional Safety Information

The following interfaces are classified as Telecommunication Network Voltage (TNV) circuits, and may be connected to exposed plant:

- DTM interface
- WAN interface
- TCM Isolator

- ASM8+: The Nortel Networks ASM8+ I/O ports are designated as OPX. This product does provide Telecommunications Ringing Voltages and can be configured to provide Voltage Message Waiting Indicator (VMWI). Installation of this device and all connections to this device must be performed by Qualified Installation Personnel who are aware of the hazards associated with telecommunications wiring and are aware of the local regulations for treatment of telecommunications wiring for OPX deployment.

The following interfaces are classified as Safety Extra Low Voltage (SELV) circuits, and shall not be connected to exposed plant:

- BRIM Interface
- TCM extensions
- external music sources (MSCX)
- auxiliary ringer (AUX)
- paging system relay (PAGE)
- serial port
- LAN interface

The following interfaces are classified as Telecommunication Network Voltage (TNV) circuits, and shall NOT be connected to exposed plant:

- ATA II

Limited Warranty

Nortel Networks warrants this product against defects and malfunctions during a one (1) year period from the date of original purchase. If there is a defect or malfunction, Nortel Networks shall, at its option, and as the exclusive remedy, either repair or replace the telephone set at no charge, if returned within the warranty period.

If replacement parts are used in making repairs, these parts may be refurbished, or may contain refurbished materials. If it is necessary to replace the telephone set, it may be replaced with a refurbished telephone of the same design and color. If it should become necessary to repair or replace a defective or malfunctioning telephone set under this warranty, the provisions of this warranty shall apply to the repaired or replaced telephone set until the expiration of ninety (90) days from the date of pick up, or the date of shipment to you, of the repaired or replacement set, or until the end of the original warranty period, whichever is later. Proof of the original purchase date is to be provided with all telephone sets returned for warranty repairs.

Exclusions

Nortel Networks does not warrant its telephone sets to be compatible with the equipment of any particular telephone company. This warranty does not extend to damage to products resulting from improper installation or operation, alteration, accident, neglect, abuse, misuse, fire or natural causes such as storms or floods, after the telephone is in your possession.

Nortel Networks shall not be liable for any incidental or consequential damages, including, but not limited to, loss, damage or expense directly or indirectly arising from the

customers use of or inability to use this telephone, either separately or in combination with other equipment. This paragraph, however, shall not apply to consequential damages for injury to the person in the case of telephones used or bought for use primarily for personal, family or household purposes.

This warranty sets forth the entire liability and obligations of Nortel Networks with respect to breach of warranty, and the warranties set forth or limited herein are the sole warranties and are in lieu of all other warranties, expressed or implied, including warranties or fitness for particular purpose and merchantability.

Warranty Repair Services

Should the set fail during the warranty period:
In North America, please call 1-800-574-1611 for further information.
Outside North America, contact your sales representative for return instructions. You will be responsible for shipping charges, if any. When you return this telephone for warranty service, you must present proof of purchase.

After Warranty Service

Nortel Networks offers ongoing repair and support for this product. This service provides repair or replacement of your Nortel Networks product, at Nortel Networks option, for a fixed charge. You are responsible for all shipping charges. For further information and shipping instructions:
In North America, contact our service information number: 1-800-574-1611.
Outside North America, contact your sales representative.

Repairs to this product may be made only by the manufacturer and its authorized agents, or by others who are legally

authorized. This restriction applies during and after the warranty period. Unauthorized repair will void the warranty.

How to use this document

This guide provides core installation and programming information for MICS 7.0 and MICS-XC 7.0 systems.

- The MICS system can be a mini (no expansion cartridge installed), a midi (installed with a two-port expansion cartridge), a maxi (installed with a six-port expansion cartridge), or a mega (Combination Fiber six-port Services Cartridges and Services cartridges for a total of 14 ports) system. For more information about the configurations, see *Connecting expansion modules* on page 242.
- The MICS-XC system has all the functionality of MICS, plus it supports module 13 and 14, which, starting with this release, provides additional digital/analog telephone support as well as the legacy Companion wireless functionality. This version of MICS software supports existing Companion functionality, although the product is no longer available. If your system will continue to use Companion handsets, refer to Companion documentation from previous releases for installation and configuration information.

Both systems support ISDN PRI and BRI, and T1 functionality. All MICS 7.0 functionality is described in this book. For system coordinators, the *MICS 7.0 System Coordinator Guide* explains how to perform common telephone programming.

Information that is specific to MICS-XC systems or MICS systems is clearly marked within this guide.

Note: Throughout this guide, reference to KSU refers to the Integrated Communication System (ICS).

What’s new with Norstar

The Norstar MICS 7.0 includes several new features and a few functionality changes.

> To upgrade from any previous version of MICS software to MICS 7.0, refer to *Upgrading your Norstar system* on page 207 for detailed instructions.

Features from 6.1MR addendum

The following features were introduced with the MICS 6.1MR (Maintenance Release) software in the *Modular and Compact ICS 6.1 Maintenance Release (MR) Documentation Update* addendum (P0609198 02):

- The enhanced Call log feature allows you to log all calls to a telephone, or to gather logs for specific lines assigned to a telephone. The Call log set feature allows you to determine which assigned lines will collect logs. Refer to *Call log set* on page 358 and *Call log* on page 436. (all profiles)
- The second dial tone table allows the user to enter up to 10 one to four-digit numbers that, when dialed, will cause the system to produce a second dial tone, at which time the user can enter the remaining call digits. Refer to *Configuring the second dial tone table* on page 403. (all profiles)
- Profiles 1 and 4, PRI: The Send Name Display feature allows you to specify if you want the business name and OLI to be transmitted over specific PRI lines. This setting

appears for PRI cards set to SL1, NI-2, DMS100, or DMS250 protocols.

- 7316E digital phone upgrade note: The addendum also made reference to the reconfiguration that occurs for 7316E digital phones installed on pre-6.1 systems that are upgraded to 6.1 or newer software. On systems prior to 6.1, the 7316E acts as a 7316 digital phone. When an upgrade to 6.1 or newer software occurs, the 7316E reconfigures as a 7316E, which means that any memory button programming is lost. As well, line button, Answer DN, and intercom assignments shift to the 7316E defaults. Refer to the MICS 7.0 *System Coordinator Guide* for details about default button programming for both these telephones.

New features and hardware for version 7.0

This software version introduces the following features:

- Digital/analog telephone support on station modules installed in ports 13 and 14 on a mega system (MICS-XC software). In previous releases, these ports only supported Companion functionality. Each module supports 16 telephones. Refer to *14-port expansion system (mega) and ICS numbering* on page 262.

Mega modules	Systems upgraded to 7.0		New 7.0 system	
	B1 DNs	B2 DNs	B1 DNs	B2 DNs
Module 13	605-620	737-752	413-428	637-652
Module 14	621-636	753-768	429-444	653-668

- An additional 32 target lines have been added to the core system for mega systems. The target line range for a Mega system is now 157-380.
- The Nortel Networks Digital Mobility system provides wireless communication with the MICS. This product

provides access to many system features, but does have some restrictions. The Norstar Networks Digital Mobility Controller (DMC) provides the functional connection between the MICS and the Nortel Networks Digital Mobility basestations and handsets. The hardware installation, system configuration, and handset feature operation instructions are contained in separate Nortel Networks Digital Mobility documentation.
The following additions have been added to system programming to support the handsets:

— New model name (UserPrefrences): DMC prtb.

— Under Maintenance: Nortel Networks Digital Mobility model name and software version were added to Port/ DN Status.

— New defaults for Nortel Networks Digital Mobility: Handsfree defaults to None and Dial Modes (User Prefrences) only supports Standard dial. Predial is allowed through the handset programming.

— These handsets emulate the model 7100 digital phones quite closely, but there are some feature control differences because of how the wireless portable communications with the system. These will be noted where applicable. Also, unlike the 7100 digital phone, the handset has a four-line, 16-character-per-line display and softkey access to display prompts.

- [ ] [ ] brings up a display when the handset is in the idle state.

Changes for version 7.0

The following information has been changed or removed from the software or from the documentation.

- SWCA enhancements:
  - — Added in system configuration: Under Capabilities **SWCA call group** allows you to assign SWCA codes to telephones. This feature works for all telephones, but can be used specifically to allow SWCA features for telephones that do not have call appearance indicators, such as the Digital Mobility phone or the 7000 and 7100 digital phones.
    This setting does not assign the codes to memory buttons on the telephones. As in previous releases, use the Button Programming tables to assign SWCA codes to physical buttons (with indicators). This feature allows telephones that do not have SWCA codes assigned to buttons to use the SWCA park and retrieve codes described below. Refer to *Capabilities* on page 345.
  - — Changed: SWCA access codes have shifted from [*] [5] [2] [0] to [*] [5] [3] [5] to [*] [5] [2] [1] to [*] [5] [3] [6].
  - — Changed: SWCA cntrl (Feature settings):
    Auto associate now has three choices, rather than a Y/N value.
    - Manual on park
    - Manual LOC
    - Automatic LOC

    Next to Auto associate is a new prompt:
    Auto ASSC: I/C with a Y/N value.

    Next to Invoke by hold is a new prompt:
    SWCA hold I/C with a Y/N value

Notes:

- The 7000 and 7100 digital telephones and the Digital Mobility phone does not support the Invoke by hold setting for this feature.
- If your system is running a private network with the MCDN feature TAT running, and Automatic LOC is active for intercom calls, the caller must ensure that at least two SWCA buttons or assignments are available for the call to complete.

Refer to *Setting SWCA controls* on page 442.

— Added: Feature [*] [5] [2] [0] searches for the next available free assigned SWCA position and parks the call on that button/code.

— Added: Feature [*] [5] [3] [7] retrieves the call that has been sitting on an assigned SWCA position the longest.

— Added: Feature [*] [5] [3] [8] retrieves the call that has most recently been parked on an assigned SWCA position.

— Added to programming: [⊘] [*] [*] [S] [E] [T] [S] now also displays the SWCA call prompt that allows you to assign SWCA codes to telephones that do not have available memory buttons with indicators.

- Default DN numbering for portable handsets, ISDN devices and Hunt groups have also changed.

DN type	Systems upgraded to 7.0	New 7.0 system
ISDN	667-696	699-728
Portable	637-666	669-698
Hunt group	707-736	739-768

- Legacy only: References to the Norstar M-series legacy telephones and Companion telephones, except where specific references are required to further define the digital phones. Default button settings for these telephones have been retained in the Programming Record. Installation information documentation for these telephones was provided on the CD with previous versions of MICS software.

Welcome to ISDN

This chapter provides you with some background information about ISDN, including information about:

- analog vs. ISDN
- type of ISDN service
- ISDN layers
- ISDN bearer capability
- services and features for ISDN PRI and BRI
- ISDN hardware
- ISDN standards compatibility

Integrated Services Digital Network (ISDN) technology provides a fast, accurate, and reliable means of sending and receiving voice, data, images, text, and other information through the telecom network.

ISDN uses existing analog telephone wires. The signal on the wire gets divided into separate digital channels, which dramatically increases the bandwidth.

ISDN uses a single transport to carry multiple information types. What once required separate networks for voice, data, images, or video conferencing is now combined on to one common high-speed transport.

Note: Nortel endeavors to test all variations of ISDN BRI and PRI on Norstar. However, due to the number of variations, this is not always possible. Check with your service provider about compatibility.

Comparing ISDN to Analog

ISDN offers significantly higher bandwidth and speed than analog transmission because of its end-to-end digital connectivity on all transmission circuits. Being digital allows ISDN lines to provide better quality signaling than analog POTS (plain ordinary telephone) lines. Also ISDN out-of-band data channel signaling offers faster call setup and tear down.

While an analog line carries only a single transmission at a time, an ISDN line can carry one or more voice, data, fax and video transmissions simultaneously.

An analog modem operating at 14.4 K takes about 4.5 minutes to transfer a 1 MB data file, while a 28.8K modem takes about half that time. Using one channel of an ISDN line, the transfer time is reduced to only one minute. If two ISDN channels are used, transfer time is just 30 seconds.

When transmitting data, the connect time for an average ISDN call is about three seconds per call, compared to about 21 seconds for the average analog modem call.

Type of ISDN service

Two types of ISDN services (lines) are available: Basic Rate Interface (BRI) and Primary Rate Interface (PRI). Each line is made up of separate channels known as B and D channels which transmit information simultaneously.

- BRI is known as 2B+D because it consists of 2 B-channels and one D-channel.
- PRI is known as 23B+D because it consists of 23 B-channels and one D-channel.

B channels

B channels are the bearer channel. They are used to carry voice or data information and have speeds of 64 kbps. Since each ISDN line (BRI or PRI) has more than one B-channel, more than one transmission can occur at the same time, using a single ISDN line.

D channels

The standard signaling protocol is transmitted over a dedicated data channel called the D-channel. The D-channel carries call setup and feature activation information to the destination. This channel has speeds of 16 kbps (BRI) and 64 kbps (PRI). Data information consists of control and signal information and packet-switched data such as credit card verification.

Tip - *Norstar PRI supports the D-channel on the 24th channel only. Norstar does not include support for a backup D-channel on the span.*

ISDN layers

ISDN layers refer to the standards established to guide the manufacturers of ISDN equipment. The layers include both physical connections, such as wiring, and logical connections, which are programmed in computer software.

When equipment is designed to the ISDN standard for one of the layers, it works with equipment for the layers above and below it.

There are three layers at work in ISDN for Norstar. To support ISDN service, all three layers must be working properly.

Layer 1: A physical connection that supports fundamental signaling passed between the ISDN network (your service provider) and the Norstar ICS. When a DTI card configured as BRI or PRI is used for a network connection, the LED for the loop on the card is lit when the layer 1 is functioning.

Layer 2: A logical connection between the ISDN network (your service provider) and the Norstar ICS. Norstar has two of these connections for each BRI line, one for each of the logical lines. Without Layer 2, call processing is not possible, and there is no dial tone.

Layer 3: Also a logical connection between the ISDN network (your service provider) and the Norstar ICS. For BRI lines, layer 3 is where call processing and service profile identifier (SPID) information is exchanged. This controls which central office services are available to the connection. For example, a network connection can be programmed to carry data calls.

The system of layers is important when you are installing, maintaining, and troubleshooting an ISDN system. See *Problems with BRI service* on page 615 for more information about working with the layers.

ISDN bearer capability

Bearer capability describes the transmission standard used by the BRI or PRI line that allows it to work within a larger ISDN hardware and software network.

The bearer capability for BRI and PRI is voice/speech at 3.1 kHz audio, and data at unrestricted 64 kbps, restricted 64 kbps, 56 kbps.

Services and features for ISDN PRI and BRI

As part of an ISDN digital network, your Modular ICS supports enhanced capabilities and features, including:

- faster call setup and tear down
- high quality voice transmission
- dial-up Internet and local area network (LAN) access
- video transmission
- network name display
- name and number blocking (PRI, BRI and analog)
- access to public protocols (only NI-1 for BRI)

PRI services and features

- call by call service selection
- dialing plan
- Emergency 911 dialing, internal extension number transmission
- Advanced Private Networking to Meridian 1 using SL-1 protocol, providing
  - access to central Voice Mail and Automated Attendant equipment connected to the Meridian system
  - Message Waiting Indication (MWI) from the Voice Mail application
  - Network Call Redirection Information (NCRI), which is built on the existing Call Forward and Call Transfer features
  - trunk route optimization (TRO)
  - trunk anti-tromboning (TAT)
  - ISDN call connection limitation (ICCL)
- tandem networking between Norstar systems

BRI services and features

- data transmission at speeds up to 128 kbps per loop, depending on the bandwidth supported by your service provider
- shared digital lines for voice and data ISDN terminal equipment

Norstar Basic Rate Interface (BRI) cards also support D-channel packet service between a network and terminal connection. This allows you to add applications such as point-of-sale terminals without additional network connections.

Any analog or digital network connections can be shared by all Norstar telephones, peripherals and applications, and ISDN terminal equipment (TE).

Modular ICS supports the following ISDN services and features offered by ISDN service providers:

- D-channel packet service (BRI only) to support devices such as transaction terminals. Transaction terminals are used to swipe credit or debit cards and transmit the information to a financial institution in data packets.
- calling number identification, which appears on both Norstar sets and ISDN terminal equipment with the capability to show the information
- Multi-Line Hunt or DN Hunting which switches a call to another ISDN line if the line usually used by the Network DN is busy. (*BRI only*)
- subaddressing of terminal equipment (TE) on the same BRI loop. However, terminal equipment which supports sub-addressing is not commonly available in North America. (*BRI only*)

Transmission of B-channel packet data is not supported by Modular ICS.

Contact your ISDN service provider for more information about these services and features. Packages for ISDN service in North America are described on page 74.

The terminal equipment (TE) connected to the Norstar system can use some feature codes supported by the ISDN service provider. Refer to *ISDN services and features* in the *Modular ICS 7.0 System Coordinator Guide* for more information.

Feature descriptions

The following section provides brief descriptions about the ISDN features, and links for more programming information.

Network name display

This feature allows ISDN to deliver the Name information of the users to those who are involved in a call that is on a public or private network. For information about system programming for this feature see, *BusName* on page 466.

Systems with Advanced Private Networking connections (MCDN SL-1) to a Meridian system also retain information about sets that have forwarded or transferred a call, as well as the originating caller information.This feature is called Network Call Redirection Information (NCRI). This information is available to all parties involved in the call.

Calls can only be redirected for a defined number of times within the network. This is currently hardcoded to five times. Once this limit is reached, call redirection will be disallowed for any type of outgoing line being presented for redirection.

Instead, the call will be handled in one of these ways:

- If Call Forward on Busy is programmed, the call will ring if a free key is available. Otherwise, it goes to the Prime set. DND Busy programming is ignored.
- If Call Forward All Calls is programmed, the call will go to the Prime set.
- If Call Forward No Answer is programmed, the call will continue to ring at the destination.

Note: If a terminal rejects a call, the call goes to the Prime set, if a Prime set is configured for the target line. If the target line is configured to send a busy tone, the call gets released with the reason as *User Busy*.

Message Waiting Indicator (MWI)

Systems with Advanced Private Networking connections to a Meridian system Voice Mail system provide message-waiting indicators at telephones connected to those lines. Telephones with displays display a message. Non-display terminals may have a lamp that lights when a message is waiting. The setting for this feature is defined from the Meridian system.

Name and number blocking

This feature suppresses the outgoing name and/or number on a call-by-call basis. For information on system programming of this feature see, *Outgoing Name and Number Blocking* on page 470. You can also set a PRI module to allow or block outgoing caller information. Use this feature if lines are connected to switches that do not support name display. Refer to *Send Name Display (PRI)* on page 524.

External call forwarding

The system now allows you to forward calls to an external number. This feature is activated using [⊙] [4] from the telephone.

MCDN trunk features

Systems with MCDN Private Networking connections can provide these trunk routing features:

- Trunk Route Optimization (TRO) finds the most direct route through the network to send a call between nodes. This function occurs during the initial alerting phase of a call.
- ISDN Call Connection Limitation: The ICCL feature piggybacks on the call initiation request and acts as a check at transit PBX points to prevent misconfigured routes or calls with errors from blocking channels.
- Trunk Anti-tromboning (TAT) is a call-reroute feature that works to find better routes during a transfer of an active call. This feature acts to prevent unnecessary tromboning of trunks. This action occurs after the speech path has been established.

Call by Call service selection for PRI

Call by Call service selection allows a user to access services or private facilities over a PRI line without the use of dedicated facilities. Various types of services such as FX, Tie, and OUTWATS are available, depending on the Protocol that is selected. Private network settings are used for tandem networking and Advanced Private Networking.

Outgoing calls are routed through a dedicated PRI Pool and the calls can be routed based on various schedules.

For information about system programming of this feature, see *Programming Call by Call service selection* on page 474.

For services information about dialing plans and PRI, see *Networking with Norstar* on page 109 and *Dialing Plan* on page 450.

Refer to the hardware section for *Call-by-call routing* on page 498.

Emergency 911 dialing

Modular ICS 7.0 with the ISDN PRI feature is capable of transmitting the telephone number and internal extension number of a calling station dialing 911 to the Public Switched Telephone Network.

State and local requirements for support of Emergency 911 dialing service by Customer Premises Equipment vary. Consult your local telecommunications service provider regarding compliance with applicable laws and regulations. For most installations, the following configuration rules should be followed, unless local regulations require other settings.

- All PSTN connections must be over PRI.
- In order for all sets to be reachable from the Public Safety Answering Point (PSAP), the system must be configured for DID access to all sets. In order to reduce confusion, the dial digits for each telephone should be configured to correspond to the extension number (DN).
- The OLI digits for each telephone should be identical to the DID dialed digits for the telephone.
- The System Coordinator is responsible for maintaining a site map or location directory that allows emergency

personnel to rapidly locate a telephone given its DID number. This list should be kept up to date and readily available, and can be included in the Programming Record

- The routing table should route 911 to a public line or line pool.
- If attendant notification is required, the routing table must be set up for all 911 calls to use a dedicated line which has an appearance on the attendant console.

Note: The actual digit string 911 is not hard-coded into the system. More than one emergency number can be supported

MCID (Profile 2)

The MCID feature allows you to use [✆] [8] [9] [7] to have call information recorded on the central office database for an incoming call on a specific line (EUROISDN lines, only).

The user must invoke the feature code during the active call or within 30 seconds (time varies on different networks) after the caller hangs up. The user must remain on the line to enter the code.

Network Call Diversion (Profile 2)

This feature is a network function of ETSI E1 lines that allows forwarding and redirection of calls outside the Norstar network when using an ETSI ISDN line. Functionality is similar to that of External Call Forward (ECF). NCD redirects calls using the same line on which they arrive. Call forward is efficient since there is no need for additional outside lines.

DTI card configured as a PRI card

The DTI card on your Norstar system can be configured to support PRI. For information about configuring a DTI card as a PRI type card, see *Provisioning the DTI card for PRI* on page 496.

ISDN hardware

To support connections to an ISDN network and ISDN terminal equipment, your Modular ICS must be equipped with one or more BRI cards (BRI-U or BRI-ST), a DTI card configured for PRI, and a Combination Fiber 6-port Services Cartridge or a Services Cartridge.

DTI card configured as PRI

A DTI card configured as PRI provides one T loop. Refer to *T reference points* on page 68 for more information.

In most PRI network configurations, you need one DTI card configured as PRI in your ICS to act as the primary clock reference. The only time when you may not have PRI designated as the primary clock reference is in a network where your Norstar system is connected back-to-back with another switch using a PRI link, such as is the case with the Advanced Private Networking configuration.

However, if the other switch is loop-timed to your Norstar system, your DTI card, configured as PRI, can be designated as a timing master.

If your Norstar has two DTI cards configured as PRI, you cannot assign both cards as the primary reference or both cards as the secondary reference. You can only have one primary reference and one secondary reference per system. Refer to *ClockSrc* on page 505 for more information.

BRI Card

The loops on BRI-U and BRI-ST cards can be programmed to support either network or terminal connections. This allows you to customize your arrangement of lines, voice terminals, data terminals and other ISDN equipment.

Detailed wiring information for BRI and PRI network and terminal connections is included in the *Installation* on page 227.

BRI-U2 and BRI-U4 card

A BRI-U2 card supports two loops and the BRI-U4 supports four loops. Each loop can be individually programmed to provide one of the following:

- a U-LT reference point connection for terminal equipment (TE) with built-in NT1 functionality (U interface)
- a U-NT reference point connection for direct connection to an ISDN network

BRI-ST card

A BRI-ST card provides four loops. Each loop can be individually programmed to one of the following:

- an S reference point connection (S loop) to ISDN terminal equipment (TE)
- a T or S reference point connection (T loop or S loop) to an ISDN network using an external NT1

U-LT reference point

The U-LT reference point connection provides a point-to-point digital connection between Norstar and TE equipped with a U interface.

A U-LT loop supports up to eight ISDN DNs, which identify TE to the ICS. Refer to the example below.

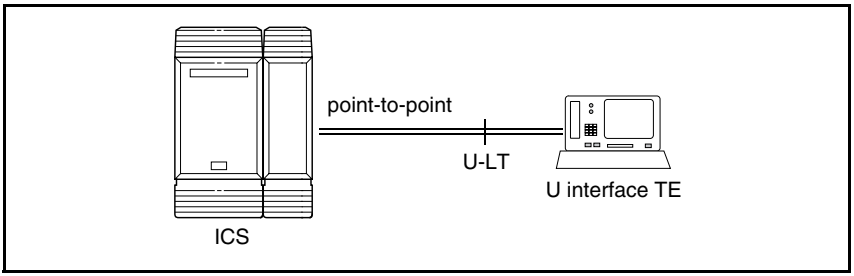

U-NT reference points

The U-NT reference point connection provides a point-to-point digital connection between the ISDN network and the ICS.

A U-NT loop provides lines that can be used by all Norstar telephones, peripherals and applications, and ISDN TE.

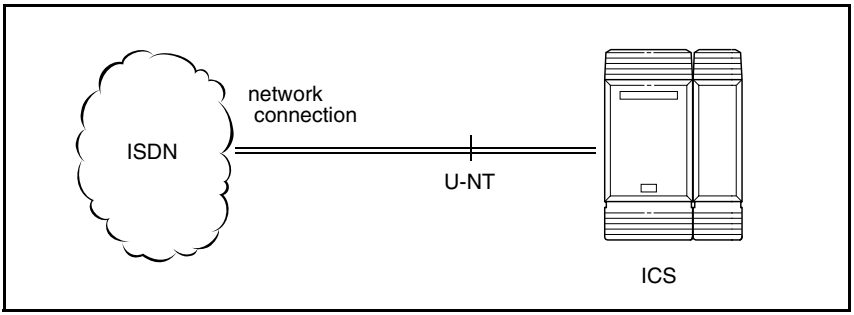

U-NT and U-LT loops can be used in combination to provide D-packet service for a point-of-sale terminal adapter (POSTA) or other D-packet device. D-packet service is a 16 kbps data transmission service that uses the D-channel of an ISDN line.

To deliver D-packet service, a network connection (U-NT) is programmed to work with a terminal connection (U-LT). The loops must be on the same physical card. For example, if the network connection is a loop found on the BRI Card in Slot 1, the terminal connection must be a loop found on the same card.

S reference point

The S reference point connection provides either a point-to-point or point-to-multipoint digital connection between Norstar and ISDN terminal equipment (TE) that uses an S interface.

S loops support up to seven ISDN DNs, which identify TE to the ICS.

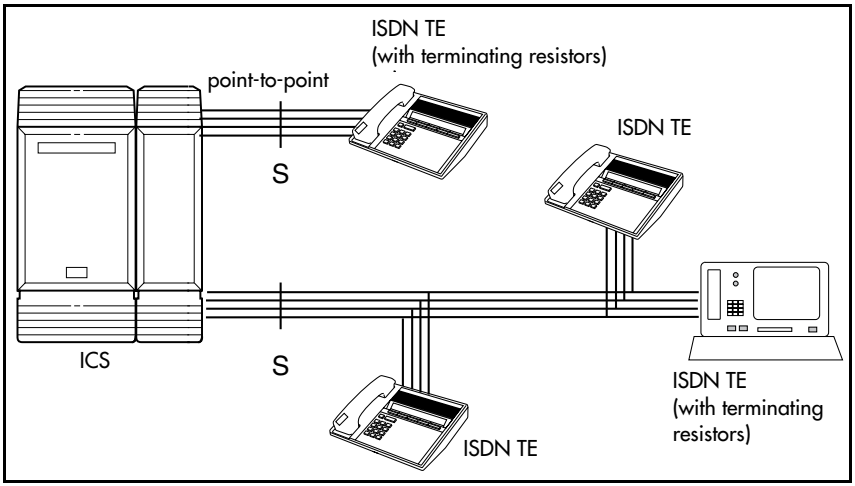

T reference points

The T reference point connections provide a point-to-point digital connection between the ISDN network and Norstar.

A T loop provides lines that can be shared by all Norstar telephones, peripherals and applications, and ISDN TE.

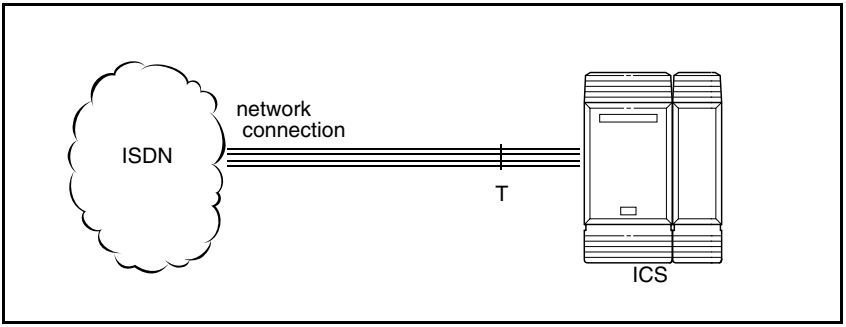

A T loop can be used in combination with an S loop to provide D-packet service for a point-of-sale terminal adapter (POSTA) or other D-packet device. D-packet service is a 16 kbps data transmission service that uses the D-channel of an ISDN line.

To deliver D-packet service, a network connection (T loop) is programmed to work with a terminal connection (S loop). The loops must be on the same physical card. For example, if the network connection is a loop found on the BRI Card in Slot 1, the terminal connection must be a loop found on the same card

Clock source for ISDN cards

Systems with ISDN interfaces need to synchronize clocking with the ISDN network and any connected ISDN terminal equipment. Clocking synchronization is supported by either a Combination Fiber 6-port Services Cartridge or a Services Cartridge.

The Modular ICS derives timing from the network using U-NT and T reference points (loops). Terminal equipment on U-LT and S reference points (loops) derive timing from the ICS.

Systems synchronize clocking to the first-available functional network connection. If there are excessive errors on the reference network connection, or if the loop fails, the next-available functional network connection is used for clock synchronization.

The clock synchronization process generates alarm codes and event messages. See the *Alarm codes* on page 548 and *Event messages* on page 555 for more information.

When you configure the network connections to the Modular ICS, you should take into account the system preferences for selecting loops for synchronization:

- lower numbered loops have preference over higher numbered loops
- the loop preference order is: 201, 202, 203, 204, 225, 226, 227, 228 (Profile 1, 3 and 4), or 201, 202, 203, 204, 231, 232, 233, 234 (Profile 2)
- the system skips U-LT, S, and analog loops when selecting a network connection for synchronization

Systems with only U-LT and S loops act as timing masters for the attached terminal equipment (TE), and are not synchronized to the network. ISDN TE without access to a network connection (BRI lines) has limited or no functionality.

If your system has both a BRI and a DTI card configured as PRI installed, it is recommended that you use PRI as the primary clock source, see *DTI card configured as a PRI card* on page 64.

Other ISDN BRI equipment: NT1

The NT1 (network termination type 1) connects an S interface (four-wire) to a U interface (two-wire). In most cases, it connects loops from a BRI-ST card to the network connection, which uses the U interface. It can also connect S interface terminal equipment (TE) to the U loop from a BRI-U2 or BRI-U4 Card.

An NT1 is not required to connect from the network to BRI-U cards or to connect U interface TE to an ICS equipped with BRI-U cards.

The NT1 converts and reformats data so it can be transmitted to and from the S or T connection. In addition, it manages the maintenance messages travelling between the network and the NT1, and between the NT1 and the ICS.

The NT1 from Nortel Networks is packaged two ways:

- as a stand alone package, which contains one NT1 card (NTBX80XX) and a power supply (NTBX81XX)
- as a modular package, which contains up to 12 NT1 cards (NTBX83XX) and a power supply (NTBX86AA)

ISDN standards compatibility

Norstar ISDN equipment supports National ISDN standards for basic call and calling line identification services.

Norstar BRI is compliant with National-1 and PRI is compliant with National-2.

Modular ICS does not support EKTS (Electronic Key Telephone System) or CACH (Call Appearance Call Handling).

Working with ISDN

Planning your ISDN network

Consult *ISDN hardware* on page 64 and *ISDN programming* on page 76 to determine a configuration of ISDN trunks and terminal equipment (TE) for the Modular ICS, then order the appropriate ISDN capability package from your ISDN service provider.

For ISDN BRI service, your service provider supplies service profile identifiers (SPIDs), network directory numbers (Network DNs), terminal endpoint identifiers (TEIs), and other information, as required, to program your Modular ICS, TE, and other ISDN equipment.

Modular ICS does not support any package with EKTS (Electronic Key Telephone System) or CACH (Call Appearance Call Handling). EKTS is a package of features provided by the service provider and may include features such as Call Forwarding, Link, Three-Way Calling, and Calling Party Identification.

Ordering ISDN PRI

When you order ISDN PRI, order two-way DID because it simplifies provisioning and provides efficient use of the PRI bandwidth.

Ordering ISDN PRI service in Canada

In Canada, order Megalink™ service, the trade name for standard PRI service and set the Norstar equipment to the supported protocol that is identified by your service provider, either DMS-100 or NI-2.

Ordering ISDN PRI service in United States

In the United States order PRI service from your service provider. Set the Norstar equipment to the PRI protocol provided by your service provider.

Ordering ISDN BRI

Ordering service in Canada

In Canada, order Microlink™ service, the trade name for standard BRI service. You can order either regular Microlink™ service, which includes the CLID (Calling Line Identification) feature, or Centrex Microlink™, which includes access to additional ISDN network features (including Call Forwarding).

When ordering Microlink™ service, it must be ordered with EKTS (Electronic Key Telephone System) turned off. If you will be using a point-of-sale terminal adapter (POSTA), ask for D-packet service to be enabled.

Ordering ISDN service in the U.S.

In the U.S., regardless of the CO (Central Office) type, order National ISDN BRI-NI-1 with EKTS (Electronic Key Telephone System) turned off. Use the following packages as a guideline for ordering your National ISDN BRI-NI-1.

However we recommend using packages M or P with the Modular ICS. Contact your service provider for more information about the capability packages it offers.

Bellcore/National ISDN Users Forum (NIUF) ISDN packages supported by Modular ICS (for ordering in U.S.)

	Capability	Feature set	Optional features	Point-of-sale	Voice	Data
M	Alternate voice/circuit-switched data on both B-channels	--	calling line identification	--	✓	✓
P	Alternate voice/circuit-switched data on both B-channels D-channel packet	flexible calling for voice (not supported by Modular ICS) Basic D-Channel Packet	additional call offering (not supported by Modular ICS) calling line identification	✓	✓	✓

If you want to transmit both voice and data, and support D-channel packet service, order package P. However, Modular ICS does not support the flexible calling for voice and additional call offering features that are included in package P.

Multi-Line Hunt may be ordered with your package. When a telephone number (the Network DN) in the group of numbers assigned by your service providers is busy, the Multi-Line Hunt feature connects the call to another telephone number in the group. Norstar supports the feature only on point-to-point, network connections (T loop or U-NT loop). Check with your service provider for more information about Multi-Line Hunt.

Any of the ISDN packages will allow you to use sub-addressing, but your ISDN TE must be equipped to use sub-addressing for the feature to work.

Supported ISDN protocols

The switch used by your service provider must be running the appropriate protocol software and the correct version of that software to support ISDN PRI and ISDN BRI. Each protocol is different and supports different services. Contact your service provider to ensure that your ISDN connection has the protocol you require.

For more information about the supported protocols and services, refer to *Call by Call service for PRI* on page 471.

ISDN programming

Most of the configuration programming for PRI and BRI lines and ISDN terminals and devices is done under Hardware. This section gives you an overview of programming for PRI and BRI lines, ISDN terminals and devices, and D-packet service.

PRI or BRI programming activity	Programming heading
View or change the card configuration for each slot in the ICS	Hardware
Provision or deprovision loops and lines	Provisioning
Enable or disable BRI or DTI card (PRI)	Module status
View status of line, loop or port	Port/DN status
Enable/disable individual PRI channels	Link Status

Programming ISDN PRI resources

Some steps will not be necessary, depending on the service you are providing.

More detailed information is included under the individual headings and settings in the Programming and Maintenance sections.

For complete card and cartridge installation instructions and safety precautions, see *Installation* on page 227.

1. Collect the information supplied by your service provider to support your ISDN package.
2. Ensure that a Combination Fiber 6-port Services Cartridge, or a Services Cartridge has been installed in the ICS.
3. Install the DTI cards in the ICS. Refer to *Installing the cartridges* on page 231 for information about card placement. If you are not using DTI cards, determine which type of card you will preprogram the ICS to use in each slot.

Tips - *For systems running 6.0 or greater software, a DTI card can be installed off-core on Module 3 or 4 on the Midi system, or module 7 or 8 on the Maxi system to expand the PRI capability of your system. This card is only supported on Profile 1 and 4.*

Note: Legacy DTI cards cannot be used off-core. A new DTI card was released in 2002 that can be used in any position.

4. Disable each card under `Maintenance`.
5. Select a card type (PRI) in `Hardware`. See *Provisioning the DTI card for PRI* on page 496, for information about protocol and other settings you must configure.

Tips - *If you are using one or more of the lines on this card for MCDN private networking, this is where you specify that protocol (SL-1).*

6. Re-enable the card in `Maintenance`.

   If required, the card goes through a firmware download process, which takes five to six minutes. During a firmware download, the bottom LED on the DTI card flashes.

Programming ISDN BRI resources

Some steps will not be necessary depending on the service you are providing.

More detailed information is included under the individual headings and settings in the Programming and Maintenance sections.

For complete card and cartridge installation instructions and safety precautions, see *Installation* on page 227.

1. Collect the information supplied by your service provider to support your ISDN package. This includes network service profile identifiers (SPIDs) and Network DNs. If you are supporting a point-of-sale terminal adapter, you also need one or more terminal endpoint identifiers (TEIs).
2. Make sure a Combination Fiber 6-port Services Cartridge, or a Services Cartridge has been installed in the ICS.
3. Install the BRI card in the ICS, Trunk Module. Refer to *Installing the cartridges* on page 231 for information about BRI card placement. If you are not using a BRI card, determine which type of card you will preprogram the ICS to use in each slot.

4. Disable each card in `Maintenance` under `Module Status`.
5. Under `Hardware`, select a card type: `BRI-ST`, `BRI-U2`, `BRI-U4`.
6. Under `Hardware`, select the type for each loop:
   - for a BRI card, select `T` or `S` if the card type is BRI-ST
   - for a BRI-U2 or BRI-U4 card, select `LT` or `NT`
7. If the card uses a T or NT loop, enter the following information, as supplied by your service provider:
   - the SPID assigned to the loop
   - the number of B-channels associated with each SPID
   - the Network DNs used with the network SPID
   - the call type of the Network DN

   Repeat the programming for the second network SPID, if any.

   If the T or NT loop is used for D-packet service:
   - turn on the service
   - assign the appropriate S-loop mapping for BRI-ST cards or LT-loop mapping for BRI-U2 or U4 cards
   - assign the TEIs to the loop. These are provided by the telco to support a point-of-sale terminal adapter or other D-packet service device.

   If the loop type is S, select the sampling used on the loop.

   If the loop type is S or LT:
   - assign ISDN DNs to the loop
   - designate one of the assigned ISDN DNs to be the DN for the loop (Loop DN).

Note: You can have a maximum of 30 ISDN DNs on your system. The default ISDN DN range is 667-696 on

systems upgraded from previous versions, and 699–728 on new 7.0 systems, for a system with three-digit DNs. You can also access the portable range of DNs (638-666 on systems upgraded from previous versions, and 669-698 on new 7.0 systems) if you need more DNs than the ISDN range has available. To change ISDN DN type, see *Change DNs* on page 430.

8. Re-enable the card in `Maintenance`. Refer to *Disabling a PRI Channel* on page 565.

   If required, the card goes through a firmware download process, which takes five to six minutes. During a firmware download, the bottom LED on the BRI card flashes.

9. Provision the loops and lines, as appropriate, in `Maintenance`. Refer to *Provisioning BRI and PRI lines* on page 563.

10. If you are configuring auto-answer BRI trunks to map to target lines, program the received number for the target line to be the same as the Network DN supplied by your service provider. This setting is found under `Lines`.

    Assign the ISDN lines and target lines to the appropriate ISDN DNs, which are the set of DNs reserved for use by ISDN devices. This setting is found under `Terminals&Sets/Line access`. ISDN lines can also be assigned to the DNs used by the telephones or any other devices connected to the Modular ICS.

    Program the ISDN terminals and devices with the appropriate ISDN DNs and terminal SPIDs by following the instructions that come with the devices. For more information, see *Programming ISDN equipment* on page 83.

    If you are setting up a D-packet service, program the point-of-sale terminal adapter or other D-packet service device

with the appropriate TEI (provided by your service provider), terminal SPID, and DN by following the instructions that come with the device.

Programming ISDN PRI lines

When the configuration programming under Hardware is complete, your PRI lines are ready to be programmed. For information about programming your PRI lines, see *Call by Call service for PRI* on page 471.

Programming ISDN BRI lines

When the configuration programming under Hardware is complete, your BRI lines are ready to be programmed in the same way as analog lines. You can, for example, place them in pools and assign them to system telephones, or ISDN terminal equipment.

However, there are some differences in the way BRI lines work that will influence how you configure them to handle incoming and outgoing calls.

- For BRI lines, in most cases, your service provider supplies two SPIDs – one for each B channel. Each SPID and one or more Network DNs are associated with a single line. Calls to a Network DN come in on a specific line. Pressing a line button selects the same line every time.
- If your service provider supplies you with a single SPID for both B channels, incoming and outgoing calls are handled according to the loop. The two lines provided by the BRI loop are pooled for both incoming and outgoing calls.

  For example, if Loop 201 is programmed with a single SPID, which supports lines 001 and 002, incoming calls made to a Network DN associated with the SPID appear on either line 001 or line 002. If you press the line button for

line 001, either line 001 or line 002 is selected. For loops which use a single SPID, assign both lines on a loop to a telephone to guarantee that all calls appear at the telephone.

Programming Direct Inward System Access (DISA) on PRI trunks

When a trunk cartridge is set to PRI, all lines on that trunk are set to Auto Answer without Direct Inward System Access (DISA).

DISA can be accessed by one of two methods.

1) Define the DISA DN to match the trailing digits of the Called Party Number (CDN).

   With Public, Private, and Tie service types, the CDN is simply truncated to the Target Line Receive Digit Length and is parsed to match the Target Line Receive Digits. DISA can be accessed by having the DISA DN match the trailing digits of the CDN. For example, with a Receive Digit Length = 4, and DISA DN = 1234, a call made to Public DN 763-1234 will be handled as follows:

   - the ISDN setup message will contain a CDN of 763-1234
   - the CDN will be truncated to the four digits, 1234
   - 1234 matches the DISA DN
   - the call will be answered with DISA

2) Use incoming Call by Call (CbC) Service routing to map the call type to the DISA DN. Refer to *Programming Call by Call service selection* on page 474 for more information.

   With FX, INWATS, 900, and SDS service types, either a Service Id (SID) or a CDN is mapped to Target Line Receive Digits.

This is programmed under Call-by-Call Routing. DISA may be accessed by having the SID or CDN map to the DISA DN. This example has a Receive Digit Length = 4, DISA DN = 1234, and CbC Routing with (Service Type = FX, Map from SID = 2, Map to digits = 1234).

A call presented to the Norstar system with service type FX and SID 2 will be handled as follows:

- The ISDN setup message will specify FX with SID = 2
- The FX SID = 2 will be mapped to DISA DN digits 1234

The call will be answered with DISA

Programming ISDN equipment

DTI cards configured as PRI support various applications that are enabled by PRI. For a list of the type of applications that are support, see *ISDN applications* on page 193.

Terminal equipment for BRI cards

ISDN devices and terminals connected to the ICS must be configured under the Hardware heading in system programming. You choose directory numbers for ISDN equipment from a pre-determined range of DNs (667-696 on systems upgraded from previous versions, and 699-728 on new 7.0 systems). Any of the ISDN DNs can be assigned to any U-LT or S loop, but each can only be assigned to one loop and one device.

Devices on an S or LT loop (BRI cards only)

Terminal equipment using a U-LT loop or S loop must be assigned an ISDN directory number (ISDN DN). This allows the TE to be assigned lines and to communicate with other devices connected to the ICS. Each DN can be assigned to only one TE and one loop.

You assign ISDN DNs to S loops and LT loops under `Assign DNs` under `Hardware`. Each S or LT loop can be programmed with eight ISDN DNs, but you cannot exceed a total of 30 ISDN DNs for the Modular ICS.

Once you have assigned ISDN DNs to a loop, designate one of the DNs as a Loop DN. The Loop DN acts as a main ISDN DN and completes the configuration of the loop.

The ISDN terminal equipment (TE) on the loop is also programmed with its ISDN DN. See the instructions that come with the ISDN device for information on how to program it to recognize the assigned DN. Most devices will require both a terminal service profile identifier (terminal SPID) and a DN, and some will require two terminal SPIDs and two ISDN DNs. The SPID used with the device should not be confused with a SPID used for network connections using an T or NT loop.

To create a terminal SPID for a device, add at least two zeros to the end of the ISDN DN. Add more zeros to the beginning or end of the ISDN DN until you have the length of SPID required by the TE. For example, if an ISDN telephone requires a six-digit SPID and has a DN of 699, its SPID is 069900. If the same TE requires a minimum of 10 digits, the SPID is 0000069900.

Most ISDN terminals require a five-digit SPID. An ISDN PC card usually requires a 10-digit SPID. Follow the directions that come with the ISDN device to program it with a SPID and ISDN DN.

Adding zeroes to SPIDs

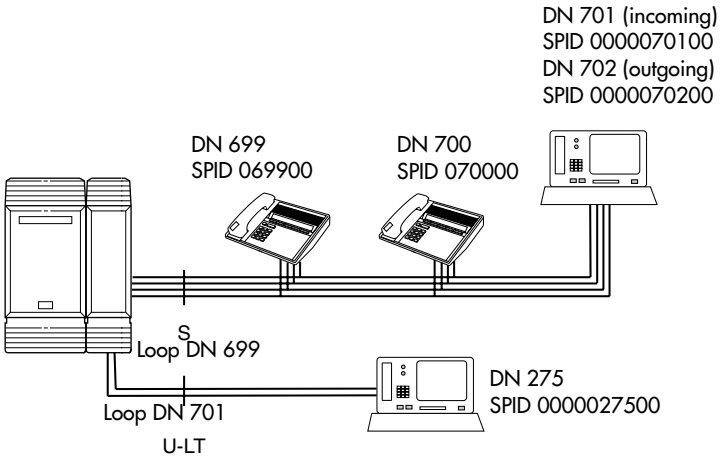

The following table uses the example in the illustration to show the programming for the S loop.

Setting	Option
Loop	201
Type	S
Sampling	Fixed
DNs on Loop 201: Assign DNs	699: Assigned 700: Assigned 701: Assigned 702: Assigned
Loop DN	699

ISDN router

By connecting an ISDN router to your Modular ICS, a group of PCs can share Internet access. This arrangement is best for a workplace where each personal computer occasionally uses an Internet connection.

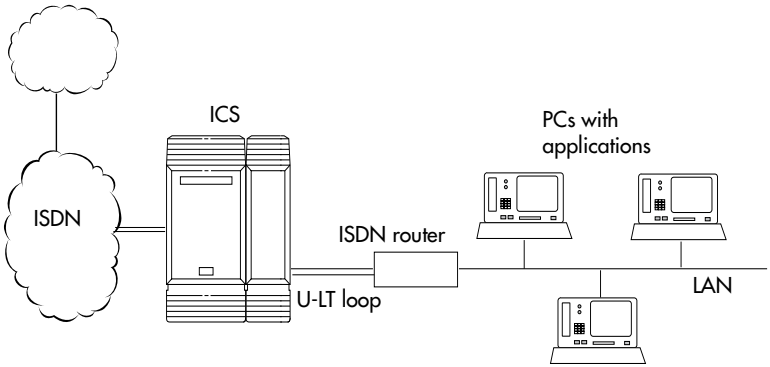

To support Internet access, you must order BRI lines from your service provider, and subscribe to an Internet service from an Internet service provider (ISP). Your personal computer must have an Internet browser and any applications supplied by your ISP.

D-packet service (BRI cards only)

The D-packet service supplied by the Modular ICS supports a point-of-sale terminal adapter (POSTA). Connecting a POSTA allows transaction terminals, such as devices where you swipe credit or debit cards, to transmit information using the D channel of the BRI line. At the same time, the B channels of the BRI line remain available for voice and data calls. A special adapter links transaction equipment, such as cash registers, credit card verification rigs, and point-of-sale terminals, to the X.25 network. This is a data communications network designed to transmit information in the form of small data packets.

To support the D-packet service, your ISDN network and financial institution must be equipped with a D-packet handler. To convert the protocol used by the transaction equipment to the X.25 protocol, your ISDN network must also be equipped with an integrated X.25 PAD.

X.25 PAD works with the following versions of X.25: Datapac 32011, CCITT, T3POS, ITT and API. The ISDN service package you order must include D-packet service, for example, Package P in the U.S. or Microlink™ with D-channel in Canada.

Your service provider supplies a Terminal Endpoint Identifier (TEI) and a DN to support D-packet service. The TEI is a number between 00 and 63 in the U.S. In Canada, the default range is 21-63. Your service provider may also supply you with a DN to program your D-packet device. The DN for D-packet service becomes part of the dialing string used by the D-packet to call the packet handler.

POSTA for ISDN BRI

When you configure D-channel packet service, you are specifying the transmission path between an ISDN loop on the network side of the ICS and the ISDN loop on the telephone side. The telephone side loop is the loop used by the point-of-sale terminal adapter. The service is turned on and configured using the network loop programming found under Hardware. Use NT loop for BRI-U2 and BRI-U4 cards and S or T loop for BRI-ST cards.

To set up D-packet service:

- go to the programming settings for the network loop under Hardware. (S, T, or NT loop)
- select the S loop or LT loop used by the POSTA

- enter the terminal endpoint identifiers (TEIs) supplied by your service provider

Point-of-sale terminal adapter

The point-of-sale terminal adapter is an analog device that connects to point-of-sale devices using an RS-232 interface and a U-LT loop. It handles the routing of packet information from the devices to the ICS and into the ISDN network.

Your service provider, usually a financial institution, supplies you with information about the compatible controller, which handles the routing of packet information from the devices to the ICS and into the ISDN network.

Trunks and target lines

Trunks are external lines that provide the physical connection between a Norstar system and other systems in a private or public network. Trunks are numbered 001 to 156 in a fully expanded system. Norstar Modular ICS supports six different types of trunks:

- PRI trunks are used for incoming and outgoing calls over an ISDN network. PRI SL-1 lines can provide MCDN network functionality in a private network between other Norstar systems, Meridian 1 systems, or Business Communications Systems, if the appropriate software code has been installed.
- T1 trunks are digital trunks that can be configured to act as loop start, ground start, E&M, DID, or leased lines, depending on your requirements.
  - DID trunks route incoming calls from the public network directly to telephones within Norstar, without an attendant.
  - Loop start trunks handle incoming and outgoing calls between Norstar and the public network.
  - E&M trunks handle incoming and outgoing traffic between the Norstar system and the private network.
- BRI trunks handle incoming and outgoing calls between Norstar and an ISDN network.
- Target lines are virtual communication paths between trunks and telephones on the Norstar system. They are incoming lines only, and cannot be selected for outgoing calls. With 224 target lines in a fully expanded system, you can concentrate auto answer calls on fewer trunks. This type of concentration is an advantage of target lines. Norstar mapping allows you to direct each target line to

one or more telephones. Target lines are numbered 157 to 380 in a fully expanded system, and 157 to 284 in all others.

Telephones can be configured to have an appearance of any type of trunk and line, including target lines, but excluding PRI trunks. If assigned, they are used for monitoring call usage.

Trunk operating modes (T1)

T1 trunks have four operating modes:

- ground start (T1 only)
- loopstart (analog and T1)
- E&M (analog and T1)
- DID (analog and T1)

Ground start trunks (T1 only)

Ground start trunks offer the same features as loop start trunks, but are used when the local service provider does not support disconnect supervision for the digital loop start trunks. Ground start trunks work with T1 only.

By configuring lines as ground start, the system will be able to recognize when a call is released at the far end.

Tips - *You cannot change the trunk mode for a ground start trunk on a DTI. It always has disconnect supervision.*

A DTI can provide a maximum of 24 ground start trunks. Analog ground start trunks are not supported.

DID trunks

DID trunks give you direct inward dialing (DID) from the public network. A typical application of these trunks is to map incoming digits onto target line appearances within the Norstar system. DID trunks can operate only as auto-answer trunks.

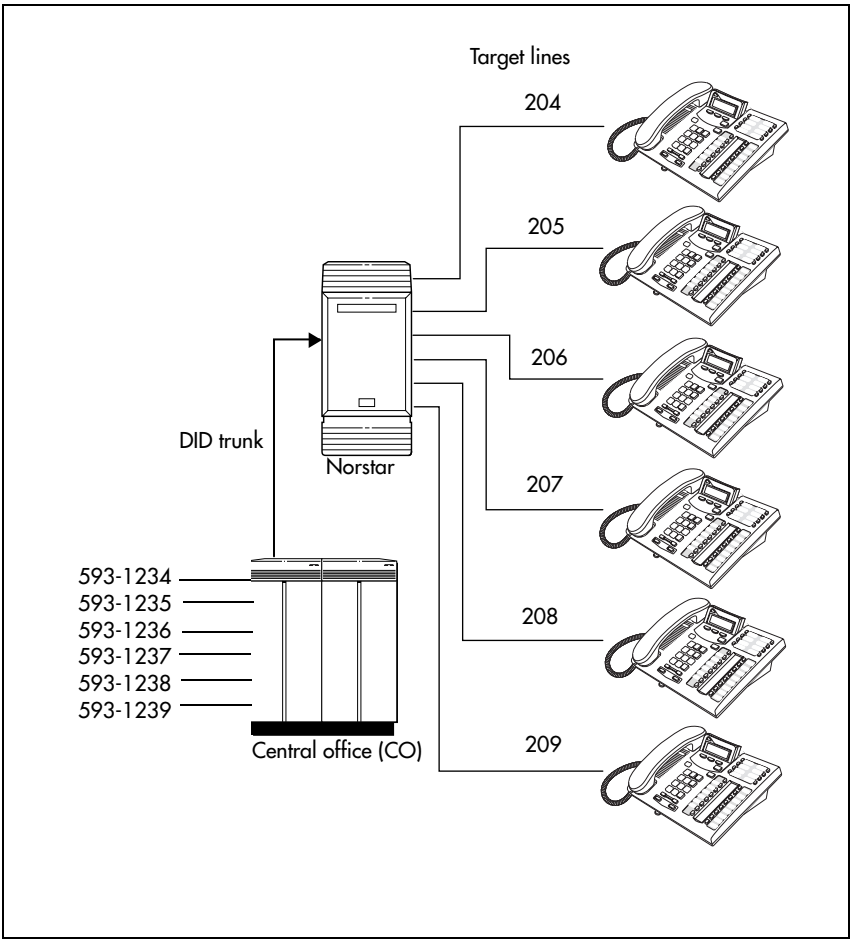

When a call comes in on a DID trunk, the Norstar system interprets the incoming digits in one of the following ways.

- If the digits map onto a target line, the call is routed to all telephones with an appearance of that target line.
- If the digits map onto the DISA DN, the caller hears stuttered dial tone. They must enter a six-digit Class of Service (COS) password from a DTMF telephone to hear system dial tone.

  They can then enter a:

  — target line number

  — line pool access code

  — remote feature code
- If the digits map onto the Auto DN, the caller hears system dial tone. They can then enter:

  — a target line number

  — the DISA DN, which will prompt for a Class of Service password

  — a line pool access code

  — a destination code

  — a remote feature code from a DTMF telephone

Tips - *Each DID Trunk Cartridge can provide four DID trunks. Each DID Trunk Cartridge also has four DTMF receivers dedicated to those trunks. A DTI can provide up to 24 DID trunks.*

You cannot configure a DID trunk as the prime line for a Norstar telephone or a Business Series Terminal.

The capabilities available to a remote caller are determined by the remote filters and remote package assigned to a line, or by the set restrictions, line restrictions and remote package assigned to the Class of Service password.

Analog loop start trunks

Loop start trunks give you incoming and outgoing access to the public network. Loop start trunks can be configured as manual-answer or auto-answer. The answer mode determines how the system handles incoming calls.

When a call comes in on a manual-answer loop start trunk, it alerts at all telephones with that line appearance.

When a call comes in on an auto-answer loop start trunk that is configured to answer with direct inward system access (DISA), the caller hears a stuttered dial tone. They must enter a six-digit Class of Service (COS) password from a DTMF telephone to access system dial tone.

Once the caller has system dial tone, they can then enter:

- a target line number
- a line pool access code
- a remote feature code.

By default, auto answer loop start trunks are configured to answer with DISA, and are used to provide controlled access to Norstar system resources.

When a call comes in on an auto-answer loop start trunk that is not configured to answer with DISA, the caller hears system dial tone.

They can then enter:

- a target line number
- the DISA DN, which will prompt for a Class of Service password
- a line pool access code
- a remote feature code from a DTMF telephone

To place an outgoing call, a loop start line can be selected by:

- pressing a line button on the telephone
- dialing a line pool access code
- pressing a memory button that has been programmed with a line pool access code

Configuration tips

- Loop start signaling is supported by Loop Start Trunk Cartridges, Call Information (CI) Trunk Cartridges and Digital Trunk Interfaces (DTI). Each Loop Start Trunk Cartridge or CI Trunk Cartridge can provide four loop start trunks. A DTI can provide up to 24 loop start trunks. If you wish to configure your loop start trunks as auto-answer, the trunks must have disconnect supervision.
- For Loop Start or CI Trunk Cartridges installed in a Trunk Module, you will also need one E&M/DISA Trunk Cartridge for every two loop start trunks that you configure as auto-answer. The E&M/DISA Trunk Cartridge provides two DTMF receivers to receive the incoming digits from the central office. An auto-answer loop start trunk can give you the same kind of direct inward dialing function as a DID trunk.
- If your system includes both loop start trunks and DID trunks, you would typically use loop start trunks for outgoing calls and DID trunks for incoming calls.
- You may configure a loop start trunk as the prime line for a Norstar telephone or a Business Series Terminal.
- The capabilities available to a remote caller are determined by the remote filters and remote package assigned to a line, or by the set restrictions, line restrictions, and remote package assigned to the Class of Service password.

- Two loopstart trunk cartridges are compatible with Modular ICS 7.0. The NT5B40GA-93 can be installed in trunk module (TM) slots only. The NT7B75GA-93 can be installed in either core slots three or four, or TM slots one, two, or three.

Analog E&M trunks

An Analog E&M trunk gives you incoming and outgoing access to other systems in a private network. E&M trunks can be configured as manual-answer or auto-answer. The answer mode determines how the system handles incoming calls.

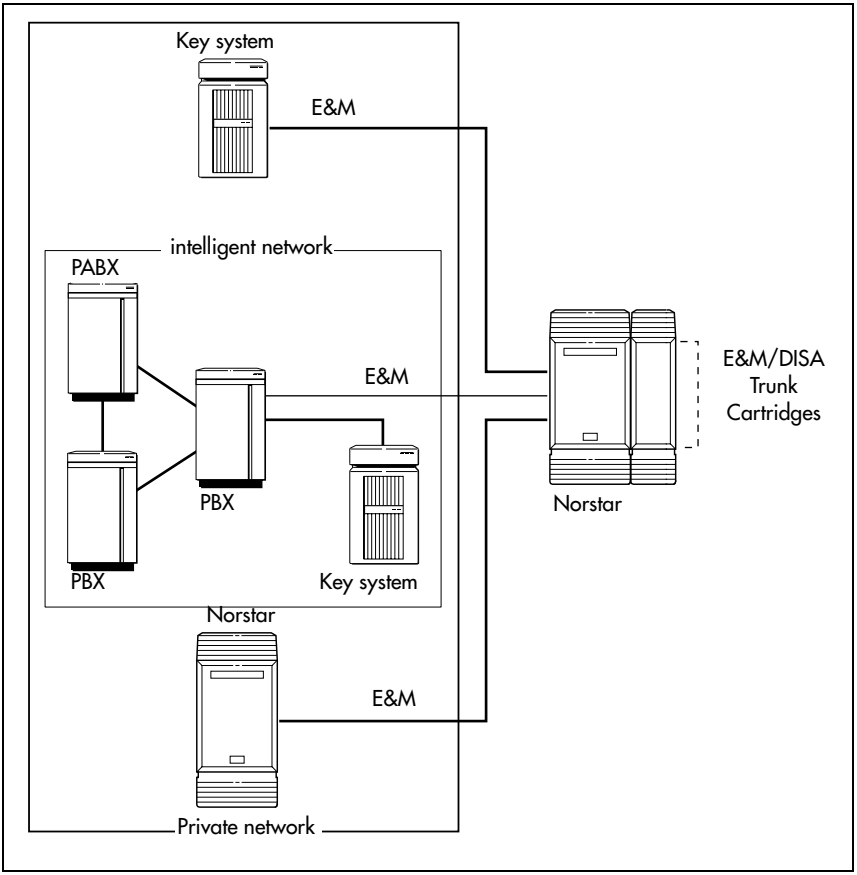

By default, auto-answer E&M trunks are answered by the system with direct inward system access (DISA), and are used to provide controlled access to Norstar system resources.

When a call comes in on a manual-answer E&M trunk, it alerts at all telephones with that line appearance.

When a call comes in on an auto-answer E&M trunk that is configured to answer with DISA, the caller hears stuttered dial tone. They must enter a six-digit COS password from a DTMF telephone to hear system dial tone.

They can then enter a:

- target line number
- line pool access code
- remote feature code

When a call comes in on an auto-answer E&M trunk that is not configured to answer with DISA, the caller hears system dial tone. At that point they can then enter one of the following:

- a target line number
- the DISA DN, which will prompt for a COS password
- a line pool access code or a destination code
- a remote feature code from a DTMF telephone

To place an outgoing call, an E&M trunk can be selected by one of the following:

- pressing a line button on the telephone
- dialing a line pool access code or destination code
- pressing a memory button that has been programmed with a line pool access code or destination code.

BRI trunks

BRI trunks give you incoming and outgoing access to an ISDN network. Like loop start trunks, they can be configured as manual-answer or auto-answer. See *Ans mode* on page 369.

BRI trunks provide a fast, accurate, and reliable means of sending and receiving data, images, text, and voice information. Using BRI lines allows for faster transmission speeds and the addition of a variety of powerful business applications, including remote LAN access, video conferencing, file transfer and Internet access.

For more information, see *Welcome to ISDN* on page 53.

Note Profile 2: European BRI trunks can only be EURO trunks.

PRI trunks

PRI trunks are used for incoming and outgoing calls over an ISDN network. PRI trunks are automatically set to auto-answer.

Incoming calls are routed to system telephones through assigned target lines. Outgoing calls are made using the intercom key assigned to a PRI line pool, or by entering a destination code to which a route has been defined using PRI line pools. You cannot assign a PRI line directly to a telephone.

PRI SL-1 lines also can provide MCDN network functionality over a private network between other Norstar systems, Meridian 1 systems, or Business Communications Systems, if the appropriate keycode has been installed. Private networking is described in *Networking with Norstar* on page 109.

Target lines

A target line is an internal communication path that is reached by means of digits received from an incoming trunk. Target lines are assigned to answer direct-dial incoming calls but they cannot be used to make outgoing calls.

You can program auto-answer trunks to map to target lines to provide for attendant bypass, which allows the call to go directly to a department or individual, and to create line concentration, where one trunk can map onto several target lines.

No target lines are automatically assigned to telephones, except if the DID template has been applied to the system.

Target lines are configured using line numbers 157-380 (mega) or 157-284, in the same way as physical lines.

Privacy issue

You can set a target line to Private (default is Public), however, such features as Call Pickup can still answer these lines at other telephones in the group.

Remote system access

The remote access feature allows callers elsewhere on the private or the public network to access a Norstar system by dialing directly into the system without going through an attendant. Once in the system, the remote user can use some of the system resources. The remote access must be enabled in programming before callers can use it.

Norstar systems support remote system access on the following trunk types, which may require the remote caller to enter a COS password for direct inward system access (DISA):

- auto-answer loop start trunks
- auto-answer E&M trunks
- DID trunks, by means of the DISA DN
- PRI trunks, by means of the DISA DN

The system resources, such as dialing capabilities, line pool access and feature access, that a remote user may access depends on the Class of Service (COS) assigned to the user. See *Class of Service* on page 103, *COS pswds* on page 412 and the *Modular ICS 7.0 System Coordinator Guide* for more details.

Use system features during a remote call

To use features on a Norstar system during a remote call-in, press [*], followed by the feature code. Even if you are calling from another Norstar system or from within a private network, press [*] instead of [✆].

Remote access on loop start and E&M trunks

Loop start trunks provide remote access to Norstar from the public network. E&M trunks provide remote access from a private network. Each must be configured to be auto-answer to provide remote system access.

A loop start trunk **must** have disconnect supervision if it is to operate in auto-answer mode. E&M trunks always operate in disconnect supervised mode.

When a caller dials into the system on a line that has auto-answer, the system answers with system dial tone and no COS password is required. In this case, control over the system capabilities available to the caller is provided only by the restriction filters assigned to the line.

When a caller dials in on a line that has auto-answer with DISA, the system answers with stuttered dial tone. This is the prompt to enter a COS password. The password used by the caller determines which system capabilities are available to the caller.

Remote access on a private network

Nodes on the private network deliver the last dialed digits to the destination Norstar node, for interpretation by the destination Norstar node. The destination Norstar node either matches the digits to a target line or interprets the digits as a remote feature request. The call is either routed to the specified target line, or the remote feature is activated.

By default, E&M trunks are set to answer with DISA. For auto-answer E&M trunks connected to a private network, change the default so that the trunks are **not** answered with DISA. If an auto-answer E&M trunk is configured to answer with DISA, the system tries to interpret any received digits as a COS password.

The DISA DN and the Auto DN allow auto-answer private network and DID calls, in the same way that calls on auto-answer loop start and auto-answer E&M trunks can be answered, with or without DISA. These DNs are described in System prgming under Access codes.

Remote access on Direct Inward Dial (DID) trunks

Remote system access on DID trunks is similar to that of E&M trunks connected to a private network.

The main differences are:

- a remote caller is on the public network dialing standard local or long-distance telephone numbers
- the digits received are delivered by the central office
- DISA cannot be administered to a DID trunk

As with a private network, the dialed digits may be programmed to match those of a specific target line DN, the DISA DN or the Auto DN.

Remote access on PRI trunks

Remote system access on PRI trunks is similar to that of E&M trunks connected to a private network.

The main differences are:

- a remote caller is on the public network dialing standard local or long-distance telephone numbers
- the digits received are delivered by the central office
- answer with DISA cannot be administered to a PRI trunk since PRI trunks are set to autoanswer.

As with a private network, the dialed digits may be programmed to match those of a specific target line DN, the DISA DN, or the Auto DN.

Controlling system access

Modular ICS programming provides several ways of protecting your Norstar system from unauthorized access or use. These features are used in combination to provide control both to users and to lines.

Class of Service

Class of Service (COS) refers to the capabilities that Norstar provides to users who access the system from the public or private network. A password defines which set of capabilities the user has access to.

The COS includes:

- filters that restrict dialing on the line
- an access package defines the set of line pools that may be accessed and whether or not the user has access to the paging feature

The COS that is applied to an incoming remote access call is determined by:

- the filters that you apply to the incoming trunk
- the Class of Service password that the caller used to gain access to the Norstar system

In cases where DISA is not automatically applied to incoming calls, the remote caller can change the class of service by dialing the DISA DN and entering a COS password.

To program COS passwords, see *Passwords* on page 412 and the *Modular ICS 7.0 System Coordinator Guide*.

Restriction filters

Restriction filters can be used to restrict the numbers that may be dialed on any external line within your Norstar system. Up to 100 restriction filters can be created for the system.

A restriction filter consists of up to 48 restrictions with associated overrides.

To restrict dialing within the system, you can apply filters to:

- outgoing external lines (as line restrictions)
- telephones (as set restrictions)
- external lines on specific telephones (as line/set restrictions)

Restriction filters can also be specified in `Restriction Service`, for times when the system is operating according to a Schedule. See *Services* on page 381 for more details.

Dialed digits must pass both the line restrictions and the set restrictions. The line/set restriction overrides the line restriction and set restriction. Refer to the following diagrams.

Line restrictions

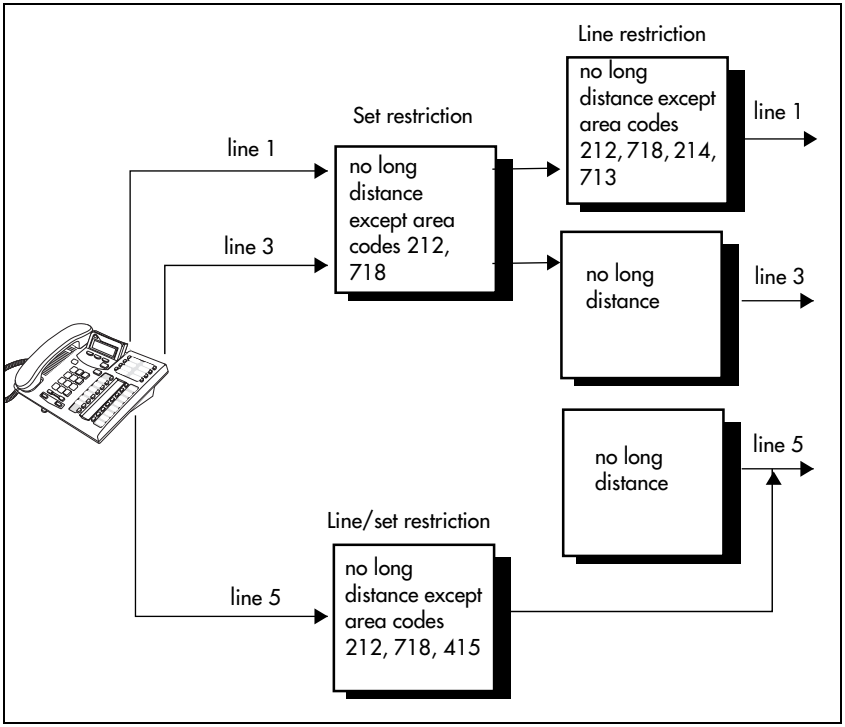

In the previous diagram, a caller using line 1 could only dial long-distance numbers to area codes 212 and 718. A caller using line 3 could not dial any long-distance numbers. A caller using line 5 could dial long-distance numbers to area codes 212, 718, and 415.

Tips - *Set restrictions have no effect on numbers dialed on an E&M trunk.*

To restrict dialing outside the system, once a caller gains remote access, you can apply restriction filters to incoming external lines, as remote restrictions.

Remote caller restrictions

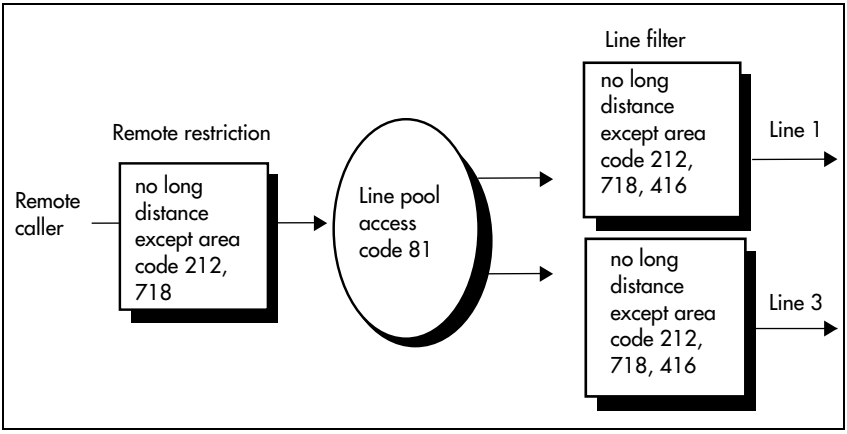

In this case, dialed digits must pass both the remote restriction and the line restriction. A remote caller can override these filters by dialing the DISA DN and entering a COS password.

For restriction filter programming instructions, see *Restrictions* on page 349 and the *Modular ICS 7.0 System Coordinator Guide*.

Direct inward system access (DISA)

To control access from the public or private network, you can configure auto-answer trunks to answer with DISA. Remote callers hear a stuttered dial tone and must then enter a COS password. The password they enter determines what access they are allowed in the system.

Auto-answer loop start and E&M trunks are configured to answer with DISA by default. For DISA programming instructions, see *Ans with DISA* on page 370.

Tips - *You must have one E&M/DISA Trunk Cartridge to provide DTMF receivers for every two auto-answer loop start trunks on Loop Start or CI Trunk Cartridges.*

DID and PRI trunks cannot be configured to answer with DISA. If you want incoming DID or PRI calls to be answered with DISA, configure the system with a DISA DN. Incoming calls that map onto the DISA DN are then routed to a line that has DISA.

In addition to public network connections, Norstar Modular ICS can be integrated into an existing private network, or to other Norstar or Meridian 1 systems to form a corporate telecommunications network.

Networking with Norstar

There are a number of ways you can network Norstar systems together, or network Norstar systems with other Nortel systems into private networks. What types of lines you use to perform the networking will determine the type of services that can be shared between systems.

Keep in mind that each node (Norstar system) is considered an external system by every other node within the network, even though, to the users, it appears to be all one system. This affects how you configure call transfer and call out features on each system. On the home node, all features are configured as local numbers. On all other nodes, all features directed to the home node are configured with external numbers.

As well, each node must have a unique identifying code. What this code will be, and how it is configured for the user, depends on what type of trunks and dialing rules you choose to use. If the network has a Meridian as part of the network, the Meridian administrator will determine identification codes for the systems.

This section describes various configurations of private networks. The general settings that are required to set up the home node for each system are provided to give you a sense of what is required for each type of network.

The common goal is to provide the user with the sense that the network is one large system that provides common access to colleagues in other buildings, cities, or countries. In some systems they may need to enter a destination code before the local number to route the call to the correct system. In other systems, using a common dialing plan allows users to dial colleagues at any location simply by entering the same number of digits they would use to dial a colleague at the next desk.

Tie-line networking

Norstar uses enhanced trunking to join other Norstar or customer equipment in a private network. This allows authorized users access to tie lines, central office lines, and Norstar features from outside the Norstar system.

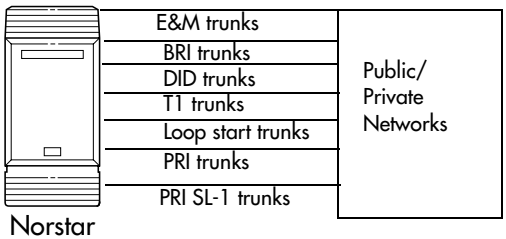

Callers using the Norstar Modular ICS system can:

- call directly to a specific Norstar telephone
- select an outgoing tie line to access a private network
- select an outgoing tie line to access features that are available on the private network
- select an outgoing central office line to access the public network
- use all of the Norstar features

Callers in the public network can:

- call directly to one or more Norstar telephones
- call into the Norstar system and select an outgoing tie line to access a private network
- call into the Norstar system and select an outgoing central office line to access the public network

- call into the Norstar system and use remote features

Callers in the private network can:

- call directly to one or more Norstar telephones
- call into the Norstar system and select an outgoing tie line to access other nodes in a private network
- call into the Norstar system and select an outgoing central office line to access the public network
- call into the Norstar system and use remote features

Norstar behind a PBX

Norstar Modular ICS can be used behind a PBX. In order to support this application, the trunk lines must be set up not to exceed 8 dB total loop loss from the serving central office to the connection point at the Norstar ICS.

Dialing plans

Dialing plans allow users to enter consistent dialing information to call other systems, or out to a public network through another system. The type of network determines what kind of dialing scheme is required.

The Norstar system has routing features that allow you to set up a transparent dialing plan with other systems in a public or private network. In a private network, you can choose to use either a uniform dialing plan (UDP) or a coordinated dialing plan (CDP) to determine how the system recognizes private network dialing strings.

A networked system uses the Public DN length to determine the number of digits that must be collected before the call is dialed outside each node on the system. Calls routed over private networks using CDP also use the public DNs in concert with a destination code that determines the routing of dialed DN. With CDP, the node identifier is included in the dialed DN string and is unique to each node.

If you create a network-wide dialing plan using CDP:

- all telephone DNs across the network need to be the same length (Public DN length)
- the first digit of the DN must be unique to each system, i.e. node A has DNs 2222 to 2999, node B has DNS 3222 to 3999, and so on.
- you indicate that you are using a coordinated dialing plan (`System Programming/Dialing Plan/Private network`)

- you create access codes that are routed out on auto-answer lines connected to the other sites (Access Codes and Call Routing)
- a telephone can be reached using the access code and the telephone number, regardless of where the call originates in the network

Calls routed over private networks using UDP require a private DN length, since each node requires an identification code in the dialing string, which makes the DN length different than for a public-routed call.

If you are networked using UDP:

- you indicate a private DN length, which is the number of digits required to access sets in the system (System Programming/Dialing Plan/Private network)
- each system has a unique location code (System Programming/Dialing Plan/Private network)
- you indicate that you are using a UDP dialing plan (System Programming/Dialing Plan/Private network)
- you set up private access codes (Access codes/Private access codes)
- a telephone in another node is accessed using the access codes, the location code, and the telephone DN.

Any programming for routing and access codes should be carefully planned using the tables supplied with the *Programming Record*. The settings for routing and destination codes are fully explained in *Services* on page 381.

Note: Network access codes must not conflict with access codes used for other purposes.

Dialing plan using public lines

Installer password required

For example, imagine that you have a system in a network of three offices such as New York, Toronto, and Santa Clara.

If there is no routing, callers would have to dial this way:

- A Norstar user in New York would have to select a line pool and dial a number such as 1-416-555-3227 to reach telephone 3227 in Toronto (416).

If there is routing:

- you could create a destination code of 3, and create a route that uses the proper line pool and DialOut. In this case, the user simply dials 3227, the receiving telephone DN being 227.

In the DialOut, P stands for pause, a host system signaling option. Press [*] [7] [8] to insert a 1.5-second pause in the dialing string. See the *Modular ICS 7.0 System Coordinator Guide* for information about other signals.

Destination code numbering in a network

Because the system checks the initial digits of a call against the routing tables, each type of internal or external call must begin with a unique pattern of digits. The following table gives a sample plan for how initial digits are assigned in a network of systems with three-digit DNs.

Leading Digits	Use
0	Network Direct Dial
221-253 (default)	Intercom calls (DNs)
4	Coordinated Dialing Plan
5	Unused
6	Unused
8	Call Park Prefix
9	All PSTN Calls

In the table, 4 is used as the initial digit for the Coordinated Dialing Plan (CDP), but 5 or 6 could also be used for this purpose.

For PRI you need to define a route with a routing code (destination code), then assign that code to the telephone.

Dialing plan using E&M lines

Installer password required

By properly planning and programming routing tables and destination codes, an installer can create a dialing plan where E&M lines between Norstar systems are available to other systems in the network

The following figure and programming chart shows how to configure a transparent dialing plan for a network of three Norstars over E&M lines.

- Each system must be running the same version of MICS 7.0 or MICS-XC 7.0 software.
- Each system must be equipped with target lines and a Trunk Module with an E&M/DISA Trunk cartridge or an ICS with a DTI with at least one E&M line.

Routing by destination codes over E&M lines

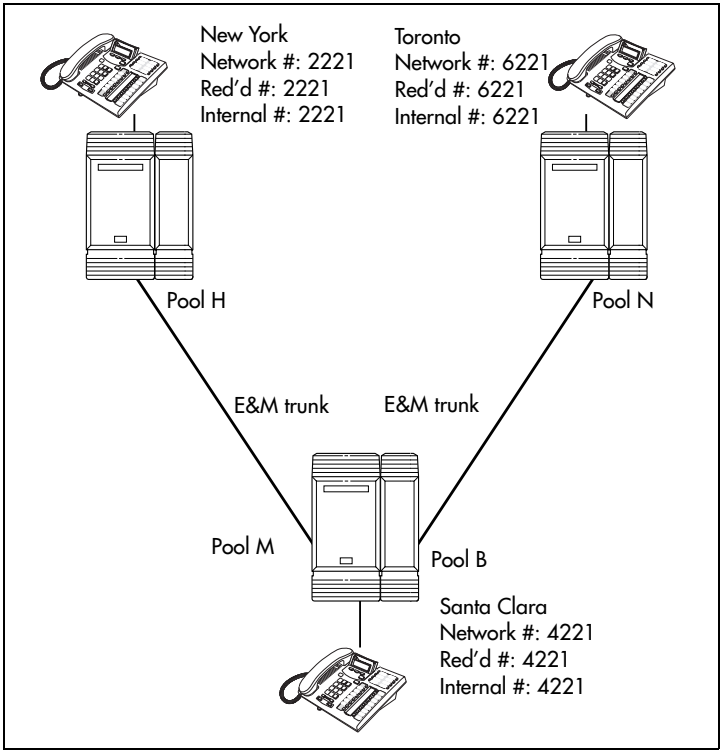

New York:

Trk/Line Data	Line 049	E&M
	Ans Mode	Auto
	Line type	Pool H
	Line 245	Target line
	Rec'd #	2221
Line Access	DN 2221	L245: Ring only
	Line pool access	Line pool H

To Santa Clara:		
Routing service	Route	001
	Use	Pool H
	DialOut	None
	DestCode	4
	Normal rte	001
	Absorb	0
To Toronto:		
	Absorb	0
Trk/Line Data	Line 049	E&M
	Ans Mode	Auto
	Line type	Pool B
	Absorb	0
	Absorb	0
Remote access	Rem access pkgs	01
	Line pool access	Pool M: ON
	Rem access pkgs	02
	Line pool access	Pool B: ON
	Line abilities	049
	Remote pkg	01
	Line abilities	050
	Remote pkg	02
Toronto:		
Trk/Line Data	Line 053	E&M
	Ans Mode	Auto
	Line type	Pool N
	Line 260	Target line
	Rec'd #	6221
Line Access	DN 6221	L260: Ring only
	Line pool access	Line pool N

To New York:		
Routing service	Route	001
	Use	Pool N
	DialOut	None
	DestCode	4
	Absorb	0
	Normal rte	001
To Santa Clara:		
	Absorb	0

In the above example:

If a user in New York calls Toronto within the network, they dial 6221. The local Norstar checks the number against the routing tables and routes the call according to the destination code 6, which places the call using Route 001.

There is no DialOut change to the number from New York, so the call appears on the auto answer line on the Norstar in Santa Clara as 6-221.

Because 6 is also a destination code on the Santa Clara system, another call is placed using route 002 from Santa Clara. This call arrives at the Toronto system, where the digits 6-221 are interpreted as a target line received number. The call will now alert at telephone 6221 in Toronto.

Dialing plans with shared line pools

Installer password required

Using routes and destination codes is a powerful and efficient way to create a transparent dialing plan. Line pools offer an alternate method of creating a dialing plan or supplementing the routing and destination codes. This is the type of dialing plan you would create for tandem networking between two or more Norstar systems.

Networking with shared line pools

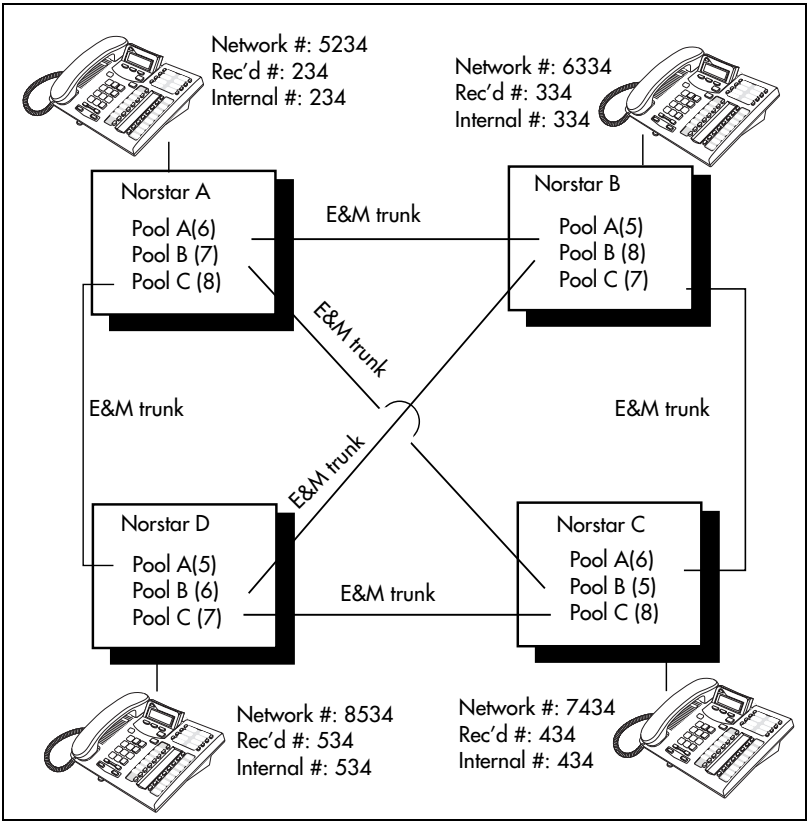

If the Norstar systems are close to each other geographically, you can conserve resources by not duplicating access. For

example, system A, B, and C are all within the same area code. System A has a line pool to Santa Clara, System B has a line pool to Montreal, and system C has a line pool to Miami. A Norstar user in system A can reach Miami by calling system C and using that line pool to Miami.

To simplify access between Norstar systems, all line pools that go to the same destination should have the same line pool access code. For example, system A and system B both have a line pool to Ottawa. You can configure both systems with the same line pool access code for the Ottawa line pool.

A dialing plan similar to the one in the following figure allows you to create a company directory that uses line pool access codes and unique DNs of a uniform length.

For instance, the person on system A at telephone 234 can press an Intercom button and dial 7434.

This means that telephone 234 has dialed the line pool access code of the trunk to system C, and will receive the dial tone of system C. The digits 434 then map to the Received number 434, and ring telephone 434 with an appearance of the associated target line.

Tips - *Network calls that use routes are subject to any restriction filters that are in effect.*

If the telephone used to make a network call has an appearance of a line used by the route, the call will move from the intercom button to the line button.

The telephone used to make a network call must have access to the line pool used by the route.

Routes generally define the path between your Norstar switch and another switch in your network, not other individual telephones on that switch.

Network calls are external calls, even though they are dialed as if they were internal calls. Only the features and capabilities available to external calls can be used.

When programming a button to dial a Network number automatically (autodial), network calls must be treated as external numbers, even though they resemble internal telephone numbers (DNs).

Call-by-Call Services Example

This example highlights the use of PRI Call-by-Call Services.

Call-by-Call routing

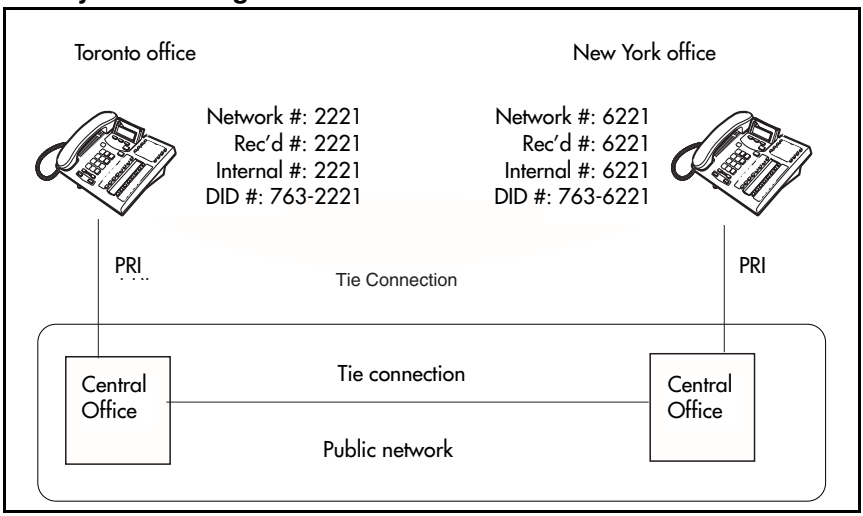

It shows two offices of a company. One office is in New York, the other is in Toronto. Each office is equipped with a Norstar system and a PRI line. Each office has to handle incoming and outgoing calls to the public network. In addition, employees at each office often have to call colleagues in the other office. To reduce long-distance costs, and to allow for a coordinated dialing plan between the offices, private (tie) lines are used to handle inter-office traffic.

If call-by-call services were *not* used, each Norstar system might have to be equipped with the following trunks:

- 12 DID lines needed to handle peak incoming call traffic.
- eight Tie (E&M) lines needed to handle inter-office calls.
- eight lines needed to handle outgoing public calls

The total required is 28 lines. If the Norstar systems were using T1 trunks, then two T1 spans would be required at each office. Note that the total of 28 lines represents the worst case value for line usage. In reality, the total number of lines in use at any one time will generally be less than 28. For example, during periods of peak incoming call traffic, the demand for outgoing lines will be low.

With PRI call-by-call services, it is not necessary to configure a fixed allocation of trunks. Each of the 23 lines on the PRI can be used for DID, Tie, or outgoing public calls. This consolidation means that it may be possible for each office to use a single PRI span, rather than two T1 spans.
With PRI call-by-call services, the only limitation is that there are no more than 23 calls in progress at any one time.

The dialing plan at each Norstar site is configured to determine the call type based on the digits dialed by the user. If a user in Toronto wishes to dial a colleague in New York, they dial the four-digit private DN (such as 6221). The dialing plan recognizes this as a private network DN, and routes the call using Tie service with a private numbering plan.

Incoming Tie calls are routed to telephones based on the digits received by the network, which in this case will be the four-digit private DN.

If a user in either location wishes to dial an external number, they dial 9, followed by the number (such as 9-555-1212). The

dialing plan recognizes this as a public DN, and routes the call using Public service.

Incoming DID calls will be routed to telephones based on the trailing portion of the digits received by the network. For example, if a public network user dials an employee in the Toronto office, the network will deliver digits 4167632221. Norstar will route the call using the last four digits, 2221.

Norstar Configuration

Toronto:		
Hardware	Card 1	PRI
	Protocol	NI-2
Trk/Line Data	Line 245	Target line
	Rec'd #	2221
Line Access	DN 2221	L245:Ring only
	Line pool access	Line pool PRI-A
To New York:		
Routing Service	Route	001
	DIalOut	No numbr
	Use	Pool PRI-A
	SrvcType	Tie
	ServiceID	1
	DN type	Private
	DestCode	6
	Normal rte	001
	Absorb	0

To Public Network:		
Routing Service	Route	002
	DialOut	No numbr
	Use	Pool PRI-A
	DN type	Public
	DestCode	9
	Normal rte	002
	Absorb	ALL

New York:

Hardware	Card 1	PRI
	Protocol	NI-2
Trk/Line Data	Line 245	Target line
	Rec'd #	6221
Line Access	DN 6221	L245:Ring only
	Line pool access	Line pool PRI-A
To Toronto:		
Routing Service	Route	001
	DialOut	No numbr
	Use	Pool PRI-A
	SrvcType	Tie
	ServiceID	1
	DN type	Private
	DestCode	2
	Normal rte	001
	Absorb	0

To Public Network:		
Routing Service	Route	002
	DialOut	No numbr
	Use	Pool PRI-A
	DN type	Public
	DestCode	9
	Normal rte	002
	Absorb	ALL

PRI dialing plan example for two-way DID

The following list shows the steps involved in configuring a dialing plan for two-way DID which uses a Public service. In this example the user dials the prefix 8 to place a call over a PRI line.

Note: Call-by-call is not needed to have two-way DID.

- in Hardware programming, configure the DTI card (PRI) to use a **Public** protocol
- for incoming calls you need to program target lines to match the DID digit that is being received on the PRI interface
- set Dial Out to None
- select PRI-A as the line pool
- set SrvcType to Public
- in Services programming access Routing Service to enter a Destination Code (8 in this example)
- set the Absorb Length to All
- the telephone that you are dialing out from must have access to the PRI Pool (programmed in Terminals/Sets)

- define rec'd digits for target lines
- define limits for incoming and outgoing public calls. Refer to *Programming Call by Call Limits* on page 475

Static DID and two-way DID

When configuring static DID with two-way service, the channels programmed as DID at the CO must be the lowest B-channels on the PRI. On your Norstar system, the BchanSeq mode must be set to descending. In this configuration, all calls on the PRI must be Public service.

For example, channels 1 to 4 are configured as DID at the CO. The CO uses ascending mode for B-channel selection, and the ICS uses descending mode.

Private networking using PRI SL-1

You can use PRI SL-1 lines to tandem a number of Norstar units into a private network. This creates a Private Network Tandem Calling (PNTC) configuration. Refer to *Private Network Tandem calling* on page 129.

You can also use PRI SL-1 lines to link one or more Norstar systems to a Meridian 1 system, or to create a network that includes one or more Business Communications Manager systems. This creates an Advanced Private Network (APN) where the MCDN protocol can be used to provide network control features that allow network calls to be delivered and transferred with optimum efficiency. If you also use a central voice mail system or central Auto Attendant system off the Meridian, MCDN provides system-wide Auto Attendant features and line redirection. Refer to *Advanced Private Networking* on page 138.

Tip - *For Modular ICS 7.0 you require both a PRI software key (profile 1, 3, and 4 only) and an MCDN software key to perform SL-1 networking.*

All Norstar systems in the network also must be running MICS 7.0 or MICS-XC 7.0 or greater software.

SL-1 networking features

- common dialing plan using a Uniform Dialing Plan (UDP), or a Coordinated Dialing Plan (CDP)
  Note: If Norstar voice mail or Auto Attendant is used as the centralized voice mail system, CDP must be used.
- PRI networks can be used for voice, data, and video calls
- no usage costs when placing remote calls over private networks

- caller information appears on both the caller telephone and the called telephone, regardless of the number of redirections
- PSTN lines connected to one of the nodes in a network can provide local public service, at local rates, to all nodes in the network, regardless of location

Features specific to Advanced Private Network

- centralized voice mail provides call waiting indications on the receiving telephone
- centralized voice mail provides common messages, call-forwarding and transfer options to all networks. If you are using the Meridian attendant system, the attendant console on the Meridian system can use system-wide call parking (camp-on) and break-in features.
- if you have trunk route optimization (TRO) turned on, the system optimizes call routing of redirected calls over the private network
- the Meridian PBX can handle both UDP and CDP, thus providing more flexibility and less reprogramming when networking existing systems. The Norstar Voice mail system requires a CDP dialing plan when it is being used for central call handling.
- Trunk Anti-tromboning (TAT) provides network rerouting that provides more efficient routing of calls to prevent unnecessary tandeming and tromboning of trunks.
- ISDN Call Connection Limitation (ICCL) piggybacks on the call initiation request and acts as a check at transit PBX points to prevent misconfigured routes or calls with errors from blocking channels.

- NCRI count allows a call to be forwarded in the network up to five times before the system releases the call as undeliverable. However if TAT or TRO occur, the counter gets reset, as well. This counter is hard-coded.

Private Network Tandem calling

Tandem networking is a chained network established between two or more MICS systems. All the systems are connected via PRI SL-1 lines.

In the network example shown below, nodes A, B, and E are in one location, Nodes C, D, and F are in a second location. The two systems are tied together between nodes A and C.

Nodes A and C are also connected to the local public network.

Tandem network

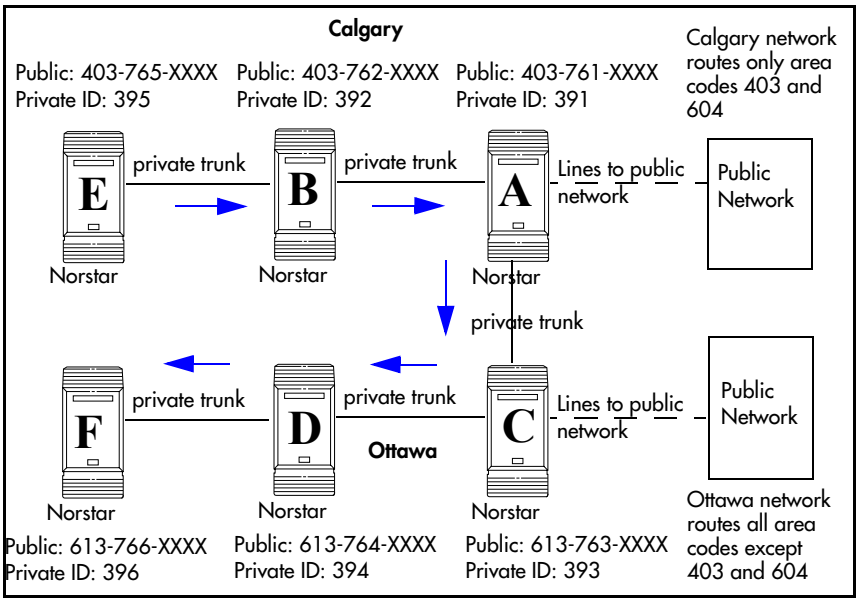

This configuration allows both local network users and remote users on the public network to access the remote PSTNs through the private lines, thus avoiding public call charges.

All nodes have unique three-digit private identification codes as well as public network codes. Routes and destination tables are configured on all systems to correctly route dialed numbers to other nodes. DNs do not necessarily have to be unique, but they must be the same length on all systems.

Calls originating from the public network

Received	Destination	Description
Node A	Node A	User in Calgary dials 761-xxxx number Incoming interface: Public DN type: Public
		Node A receives the call and identifies it as terminating locally. Uses target line to route call. Destination: Local (target line)
Node A	Node B	User in Calgary dials a 762-xxxx number DN type: Public
		Node A receives it and identifies it as being for node B. Uses private trunk to route it to B. Incoming interface: Public Destination: Remote Node Outgoing interface: Private
		Node B receives the call and identifies it as terminating locally. Uses target line to route call. Incoming interface: Private Destination: Local (target line)

Received	Destination	Description
Node A	Node E	User in Calgary dials a 765-xxxx number. DN type: Public
		Node A receives it and identifies it as being for B. Uses private trunk to route call to B. Incoming interface: Public Destination: Remote node Outgoing interface: Private
		Node B receives it and identifies it as being for E. Uses private trunk to route call to E. Incoming interface: Private Destination: Remote node Outgoing interface: Private
		Node E receives the call and identifies it as terminating locally. Uses target line to route call. Incoming interface: Private Destination: Local (target line)
Node A	Node C	User in Calgary dials a 761-xxxx number which is answered with DISA. Incoming interface: Public DN type: Public Destination: Local (DISA DN)
		User enters a COS password and a private DN for Node C i.e. 6 + 393-xxxx DN type: Private
		Node A receives it and identifies it as being for C. Uses the private trunk to route the call to C. Incoming interface: (DISA user) Destination: Remote node
		Node C receives the call and identifies it as terminating locally. Uses target line to route call. Incoming interface: Private Destination: Local (target line)

Received	Destination	Description
Node A	Node D	User in Calgary dials a 761-xxxx number which is answered with DISA. Incoming interface: Public DN type: Public Destination: Local (DISA DN)
		User enters a COS password and a private DN for Node D, i.e. 6 + 394-xxxx DN type: Private
		Node A receives it and identifies it as being for C. Uses the private trunk to route the call to C. Incoming interface: (DISA user) Destination: Remote node
		Node C receives it and identifies it as being the responsibility of D. Uses private trunk to route call to D. Incoming interface: Private Destination: Remote node
		Node D receives the call and identifies it as terminating locally. Uses target line to route call. Incoming interface: Private Destination: Local (target line)
Node A	Ottawa PSTN	User in Calgary dials a 761-xxxx number which is answered with DISA. User enters a COS password and an Ottawa public network number. Incoming interface: Public DN type: Public Destination: Local (DISA DN)
		Node A receives it and identifies it as being for C. Uses the private trunk to route the call to C. Incoming interface: Local (DISA user) Destination: Remote PSTN
		Node C receives the call and identifies it as a public number and routes it out over the local PSTN. Incoming interface: Private Destination: Local PSTN

Calls originating in the private network

Received	Destination	Description
Node B	Node B	DN is internal, therefore no trunk routing is required. Incoming interface: Intercom DN type: Local Destination: Local
Node A	Ottawa PSTN	User in Node A dials the private network access code for Node C, followed by an Ottawa public number. Incoming interface: Intercom DN type: public Destination: Remote PSTN
		Node C receives the call and identifies it as being for the public network. Node C routes the call over the local public network. Incoming interface: Private DN type: Public Destination: Local PSTN
Node B	Calgary PSTN	User on Node B dials a public DN.
		Node B recognizes it as being the responsibility of Node A and uses private trunk to route the call to A. Incoming interface: Intercom Destination: Remote node
		Node A receives the call and identifies it as being for the public network. Node A routes the call over the local public network. Incoming interface: Private Destination: Remote PSTN

Received	Destination	Description
Node B	Node A	User in Node B dials a private DN for a user on A. DN type: Private
		Node B recognizes it as being for Node A. Uses the private trunk to route the call the call to A. Incoming interface: Intercom Destination: Remote node
		Node B receives the call and identifies it as terminating locally. Uses target line to route call. Incoming interface: Private Destination: Local (target line)
Node B	Node C	User on Node B dials a private DN for a user on C. DN type: Private
		Node B recognizes it as being the responsibility of Node A and routes the call over the private trunk to A. Incoming interface: Intercom Destination: Remote node
		Node A receives it and identifies it as being for C. Uses IP trunk to route call to C. Incoming interface: Private Destination: Remote node
		Node C receives the call and identifies it as terminating locally. Uses target line to route call. Incoming interface: Private Destination: Local (target line)

Received	Destination	Description
Node B	Node D	User on B dials a private DN for node D. DN type: Private
		Node B identifies it as being for node A and uses private trunk to route the call to A. Incoming interface: Intercom Destination: Remote node
		Node A receives it and identifies it as being for C. Uses IP trunk to route call to C. Incoming interface: Private Destination: Remote node
		Node C receives it and identifies it as being for D. Uses the private trunk to route call to D. Incoming interface: Private Destination: Remote node
		Node D receives the call and identifies it as terminating locally. Uses target line to route call. Incoming interface: Private Destination: Local (target line)
Node B	Node F	User on B dials a private DN for node F. DN type: Private
		Node B identifies it as being for node A and uses private trunk to route the call to A. Incoming interface: Intercom Destination: Remote node
		Node A receives it and identifies it as being for C. Uses IP trunk to route call to C. Incoming interface: Intercom Destination: Remote node
		Node C receives it and identifies it as being for D. Uses the private trunk to route call to D. Incoming interface: Intercom Destination: Remote node
continued on next page		

Received	Destination	Description
Node B to Node F (continued)		Node D receives it and identifies it as being for F. Uses the private trunk to route call to F. Incoming interface: Intercom Destination: Remote node
		Node F receives the call and identifies it as terminating locally. Uses target line to route call. Incoming interface: Private Destination: Local (target line)

Routing for tandem networks

In tandem networks each node needs to know how to route calls that do not terminate locally. To do this, you set up routes for each connecting node by defining destination codes for each route.

If the node is also connected to the public network, the usual routing is required for that connection.

The following examples show the routing tables for Node A and Node C for externally-terminating calls.

Note: The PRI lines are enbloc lines, so all dialed digits are collected before being dialed out.

Node A Destination Code Table, external termination

Route	Absorb length	Destination code (public DNs)
4 (PSTN)	1	91604
3 (Node B)	0	91403762 (Node B)
3 (Node B)	0	91403765 (Node E)
4 (PSTN)	1	9140376* (not internal network)
4 (PSTN)	1	914037* (not internal network)
4 (PSTN)	1	91403* (not internal network)
4 (PSTN)	1	9* (not internal network)
* This wild card represents a digit between 1 and 9.		

Node A Destination Code Table, internal termination

Route	Absorb length	Destination code (private DNs)
3 (Node B)	0	392 (Node B)
3 (Node B)	0	395 (Node E)
5 (Node C)	0	393 (Node C)
5 (Node C)	0	394 (Node D)
5 (Node C)	0	396 (Node F)

Node C Destination Code Table, external termination

Route	Absorb length	Destination code (Public DNs)
3 (Node B)	0	91613764 (Node D)
3 (Node B)	0	91613766 (Node F)
4 (PSTN)	1	9161376* (not internal network)
4 (PSTN)	1	916137* (not internal network)
4 (PSTN)	1	91613* (not internal network)
4 (PSTN)	1	9161* (not internal network)
4 (PSTN)	1	916* (not internal network)
4 (PSTN)	1	91* (not internal network)
4 (PSTN)	1	9 (not internal network)
* This wild card represents a digit between 1 and 9.		

Node C Destination Code Table, internal termination

Route	Absorb length	Destination code (Private DNs)
3 (Node D)	0	394 (Node D)
3 (Node D)	0	396 (Node F)
5 (Node A)	0	391 (Node A)
5 (Node A)	0	392 (Node B)
5 (Node A)	0	395 (Node E)

Advanced Private Networking

There are two ways of setting up dialing plans for an Advanced Private Network (APN).

- The first method uses routing tables to interconnected systems. This type of network may use SL-1 lines, but it does not use the MCDN protocol, even though the MCDN keycode is required to allow the use of PRI SL-1 lines.
- The second method allows you to network among other Norstar systems, Meridian systems, and Business Communications Manager systems using SL-1 lines and the MCDN protocol. This system uses the private dialing plans in the same way as the Private Network Tandem Calling network does. However, if you are using a Norstar to support your central voice mail or call attendant, you must use a CDP dialing plan. The MCDN protocol provides additional features that support the central voice mail/Auto Attendant as well as system call routing.

Networking using routing codes

If you have a simple private network, composed of one central Meridian 1 and two smaller sites with Norstar systems, you can use routing codes to direct calls. The following example shows a Meridian 1, representing the head office, connected to several smaller branch offices.

In this network, only the head office has trunks connected to the public network. The branch offices access the public network via the private connection to the head office. This configuration allows for cost savings by consolidating the public access trunks. Users at all three locations access the public network by dialing 9, followed by the public number.

For example, a user in the west end branch might dial 9-555-1212 (for a local call) or 9-1-613-555-1212 (for a long distance call). These public calls are routed to the Meridian 1 by the Norstar routing table. Routing tables at the Meridian 1 will then select an appropriate public facility for the call.

Private network calls are made by dialing a four-digit private network DN. For example, if a user in the west end branch wishes to call a user in the east end branch within the private network, they dial 6221.

Private networking using routing tables

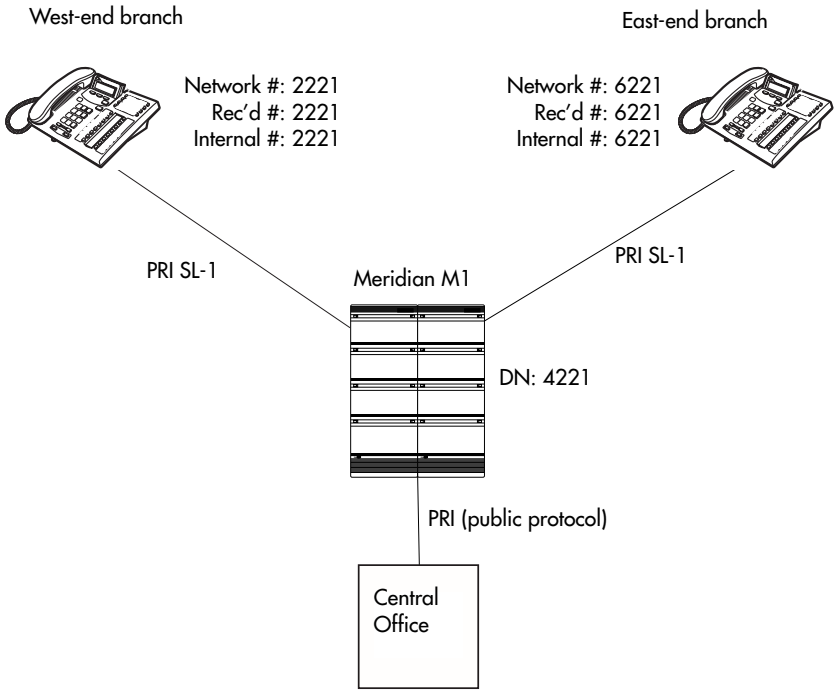

Routing network settings

West End:		
Hardware	Card 1	PRI
	Protocol	SL-1
	BchanSeq	Ascend
	ClockSrc	Primary
Trk/Line Data	Line 245	Target line
	Rec'd #	2221
Line Access	DN 2221	L245:Ring only
	Line pool access	Line pool PRI-A
To Head Office:		
Routing Service	Route	001
	DialOut	No numbr
	Use	Pool PRI-A
	DN type	Private
	DestCode	4
	Normal rte	001
	Absorb	0
To East End:		
Routing Service	DestCode	6
	Normal rte	001
	Absorb	0
To Public Network:		
Routing Service	Route	002
	DialOut	No numbr
	Use	Pool PRI-A
	DN type	Public
	DestCode	9
	Normal rte	002
	Absorb	0

East End:

Hardware	Card 1	PRI
	Protocol	SL-1
	BchanSeq	Ascend
	ClockSrc	Primary
Trk/Line Data	Line 245	Target line
	Rec'd #	6221
Line Access	DN 6221	L245:Ring only
	Line pool access	Line pool PRI-A
To Head Office:		
Routing Service	Route	001
	DialOut	No numbr
	Use	Pool PRI-A
	DN type	Private
	DestCode	4
	Normal rte	001
	Absorb	0
To West End:		
Routing Service	DestCode	2
	Normal rte	001
	Absorb	0
To Public Network:		
Routing Service	Route	002
	DialOut	No numbr
	Use	Pool PRI-A
	DN type	Public
	DestCode	9
	Normal rte	002
	Absorb	0

Additional Configuration

In this example, outgoing public network calls dialed from a Norstar telephone are passed to the Meridian 1, and the Meridian 1 is responsible for seizing a public trunk. For this reason, the 9 prefix is left in the number passed to the Meridian 1.

This necessitates modifying the Public DN lengths table on each Norstar to account for the extra leading digit. Essentially, the eight pre-configured entries are modified to include a leading 9 in the prefix digits, and the length value for each entry is increased by one.

The new entries are listed below.

Prefix	Length
Default	8
90	12
900	13
901	18
9011	19
91	12
9411	4
9911	4

Carrier codes:

If a system has a different long-distance service from the local service, or if the long-distance service changes within the schedules, the routing tables can be set up to include a carrier code. You define the code under System Programming/ Access codes/Carrier codes. You then refer this to the routing tables in Services/Routing Service/route/

`Carrier codes` where you define it as part of the destination code, or part or all of the DialOut string when you set up a routing service schedule.

Meridian M1 Configuration:

- Meridian M1 is the timing master for the private network PRI connections.
- Meridian M1 uses descending mode for PRI B-channel selection.
- The Meridian M1 must recognize calls dialed to 2xxx and 6xxx numbers, and route the call over PRI to either the East or West end offices. The same applies to incoming DID calls from the public network.
- The Meridian M1 must recognize numbers starting with 9 as public numbers, whether the numbers are dialed by Meridian M1 users or by Norstar users.

MCDN Private Networking

When you use MCDN on your private network, you gain the advantages of being able to use a central voice mail/Auto Attendant system to service the entire network, as well as gaining advanced system network features, which keep network traffic flowing along the most efficient paths.

MCDN networking uses PRI SL-1 lines and the MCDN protocol firmware. You need keycodes for each of these features.

To set up calling over an MCDN network, you define a dialing plan that allows the user on any system to experience consistent dialing strings for internal and external calls. For this type of network, the DNs need to be the same length, but they do not have to be unique to the entire network.

If your network is connected to a Meridian 1, and it is the Meridian that you are using for centralized voice mail and Auto Attendant, you can use either a UDP or CDP dialing plan.

- If you use UDP, you dial a unique location code with the local telephone DN range.
- In the case of CDP, the first digit of the DN range denotes the node and is unique to each system.

However, if you are using a Norstar voice mail/Auto Attendant for your centralized voice mail, you must create the calling protocols on the network using CDP. This is a private dialing plan where the first digit of the extensions for each system is unique to that system, and all DNs on all systems are the same length.

Using a UDP dialing plan

To use UDP, the user dials this combination: ACn+LOC+DN (private/public *AC*cess code, *LOC*ation code, *D*irectory *N*umber)

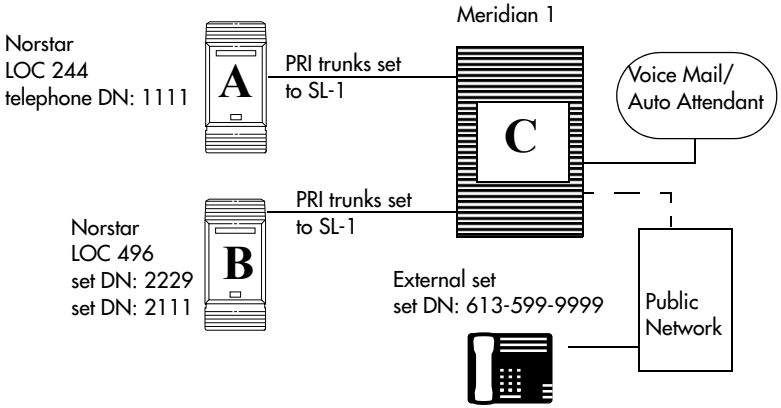

UDP call scenarios

Call scenario	LOC	Dialing String	Calling Party Number	Called Party Number
Calling to another site within the network	244	*6-668-2222	244-1111	668-2222
Calling within the node	496	2229	1111	2229
Calling the public network	244	**9-599-9999	613-763-1111 (OLI Public DN)	599-9999
LOC: This code defines the particular Norstar system. * Private Access Code (within network) **Public Access Code (out to PSTN)				

UDP call routing

From A:		
Hardware	Card 1	PRI
	Protocol	SL-1
	BchanSeq	Ascend
	ClockSrc	Primary
Trk/Line Data	Line 245	Target line
	Rec'd #	1111
Line Access	DN 1111	L245:Ring only
	Line pool access	Line pool PRI-A
Dialing Plan	Private	UDP
	PrivNetID	1
	Loc Code	244
	Priv DN len	7
To C:		
Routing Service	Route	001
	DialOut	No numbr
	Use	Pool PRI-A
	DN type	Private
	DestCode	4
	Normal rte	001
	Absorb	0
Access Codes	PrivAccCode	4
To B:		
Routing Service	DestCode	6
	Normal rte	001
	Absorb	0
Access Codes	PrivAccCode	6

To Public Network:		
Routing Service	Route	002
	DialOut	No numbr
	Use	Pool PRI-A
	DN type	Public
	DestCode	9
	Normal rte	002
	Absorb	0
Access Codes	PrivAccCode	9
From B:		
Hardware	Card 1	PRI
	Protocol	SL-1
	BchanSeq	Ascend
	ClockSrc	Primary
Trk/Line Data	Line 245	Target line
	Rec'd #	2229
Line Access	DN 2229	L245:Ring only
	Line pool access	Line pool PRI-A
Dialing Plan	Private	UDP
	PrivNetID	2
	Loc Code	496
	Priv DN len	7
To C:		
Routing Service	Route	001
	DialOut	No numbr
	Use	Pool PRI-A
	DN type	Private
	DestCode	4
	Normal rte	001
	Absorb	0
Access Codes	PrivAccCode	4

To A:		
Routing Service	DestCode	2
	Normal rte	001
	Absorb	0
Access Codes	PrivAccCode	2
To Public Network:		
Routing Service	Route	002
	DialOut	No numbr
	Use	Pool PRI-A
	DN type	Public
	DestCode	9
	Normal rte	002
	Absorb	0
Access Codes	PrivAccCode	9

Using a CDP dialing plan

To use CDP, the user dials the internal DN for the target telephone. Each node DN range starts with a unique digit.

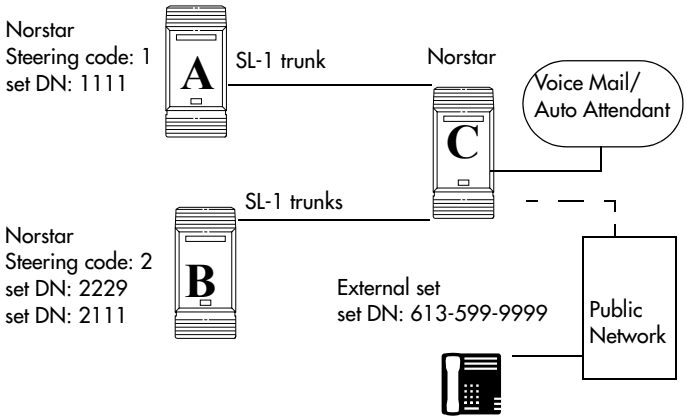

CDP call scenarios

Call scenario	Dialing String	Calling Party Number	Called Party Number
Calling to another site within the network	2229	1111	2229
Calling within the node	2229	2111	2229
Calling the public network	*9-599-9999	613-763-1111 (OLI Public DN)	599-9999
*Public Access Code (out to PSTN)			

CDP call routing

From A		
Hardware	Card 1	PRI
	Protocol	SL-1
	BchanSeq	Ascend
	ClockSrc	Primary
Trk/Line Data	Line 245	Target line
	Rec'd #	1111
Line Access	DN 1111	L245:Ring only
	Line pool access	Line pool PRI-A
Dialing Plan	Private	CDP
	PrivNetID	1
To C:		
Routing Service	Route	001
	DialOut	No numbr
	Use	Pool PRI-A
	DN type	Private
	DestCode	4
	Normal rte	001
	Absorb	0

To B:		
Routing Service	DestCode	6
	Normal rte	001
	Absorb	0
To Public Network:		
Routing Service	Route	002
	DialOut	No numbr
	Use	Pool PRI-A
	DN type	Public
	DestCode	9
	Normal rte	002
	Absorb	0

From B:

Hardware	Card 1	PRI
	Protocol	SL-1
	BchanSeq	Ascend
	ClockSrc	Primary
Trk/Line Data	Line 245	Target line
	Rec'd #	2229
Line Access	DN 2229	L245:Ring only
	Line pool access	Line pool PRI-A
Dialing Plan	Private	CDP
	PrivNetID	2
To C:		
Routing Service	Route	001
	DialOut	No numbr
	Use	Pool PRI-A
	DN type	Private
	DestCode	4
	Normal rte	001
	Absorb	0

To A:		
Routing Service	DestCode	2
	Normal rte	001
	Absorb	0
To Public Network:		
Routing Service	Route	002
	DialOut	No numbr
	Use	Pool PRI-A
	DN type	Public
	DestCode	9
	Normal rte	002
	Absorb	0

MCDN trunk call features

The table below lists the MCDN features that are provided by an SL-1 link with MCDN active (the keycode is installed). The features affect call redirection and trunking functions, as shown in the table below.

MCDN network features

Centralized messaging	• network call redirection information (NCRI)
Centralize trunking	• ISDN call connection limitation (ICCL) • trunk route optimization (TRO) • trunk anti-tromboning (TAT)

Network Call Redirection Information

NCRI builds on the following call features:

- External Call Forward
- Call Transfer
- Call Forward

NCRI adds the ability to redirect a call across an MCDN network using Call Forward (all calls, no answer, busy) and Call Transfer features. The call destination also receives the necessary redirection information. This feature allows the system to automatically redirect calls from within a Norstar system to the Meridian Mail system, which resides outside the Norstar system on a Meridian 1 or another Norstar.

The figure below shows an example of this situation, where user A calls user B on the same Norstar system. If user B is busy or not answering, the call automatically gets transferred to a Meridian Mail number (user C) across an MCDN link between the Norstar system and the Meridian 1 system (or another Norstar system) where the mailboxes are set up.

Network call redirection path

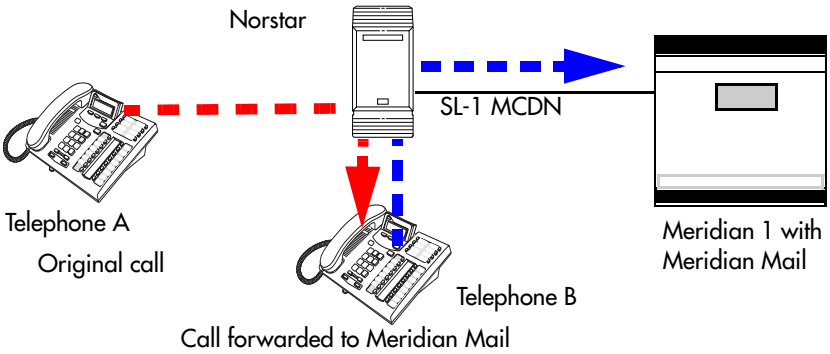

If you are using the centralized voice message system from a Meridian 1 system, you require the following programming on the M1:

M1 programming in LD 17

- NASA set to Yes
- NCRD set to Yes

<table>
<tr><td colspan="3">Verifying NASA is Active
• Overlay 22, LD 22
• REQ: PRT
• TYPE: ADAN DCH (slot number)
• NASA should be set to yes</td><td></td></tr>
<tr><td>If NASA is not on:</td><td>Disable the D channel
• Overlay 96, LD 96
• REQ: CHG
• TYPE:DIS DCH</td><td>Disable the loop
• Overlay 60, LD 60
• REQ: CHG
• TYPE: DISL (slot number)</td><td>Program the D channel
• Overlay 17, LD 17
• REQ: CHG
• TYPE: ADAN
• ADAN: CHG DCH (slot number)
• Keep pressing enter until you get to NASA
• TYPE: yes
• TYPE: end</td></tr>
<tr><td colspan="2">Verifying NCRD
• Overlay 20, LD 20
• REQ: PRT
• TYPE: TIE
• CUST: 0
• Route: Enter the route defined in LD 20
• Keep pressing enter until all values are displayed. Check if NCRD is yes.</td><td colspan="2">If NCRD is set to no
• Overlay 16, LD 16
• REQ: CHG
• TYPE: RDB
• CUST: 0
• ROUT: (route number) from LD 20
• Keep pressing enter until you get NCRD and type Yes
• Keep pressing enter until you get the REQ prompt again
• TYPE: end</td></tr>
</table>

ISDN Call Connection Limitation

The ICCL feature piggybacks on the call initiation request and acts as a check at transit PBX points to prevent misconfigured routes or calls with errors from blocking channels.

This feature adds a transit/tandem counter to a call setup message. This counter is compared at each transit PBX with a value programmed into the transit PBX, in a range from 0 to 31. If the call setup counter is higher than the PBX value, the call will be blocked at the PBX and cleared back to the network. This prevents calls from creating loops that tie up lines.

Norstar configurations:

- Setting ICCL

1. With the display showing System prgming press [Next] until the display shows NetworkServices.
2. Press [Show] until MCDN displays.
3. Press [Show]. NetwkICCL: displays.
4. Press CHANGE to choose either Y (yes) or N (no)

- Under Hardware, define Maximum transits for the card.

The diagram below demonstrates how a call might loop through a network if the system is **not** set up with the ICCL feature.

Call loop on system without ICCL

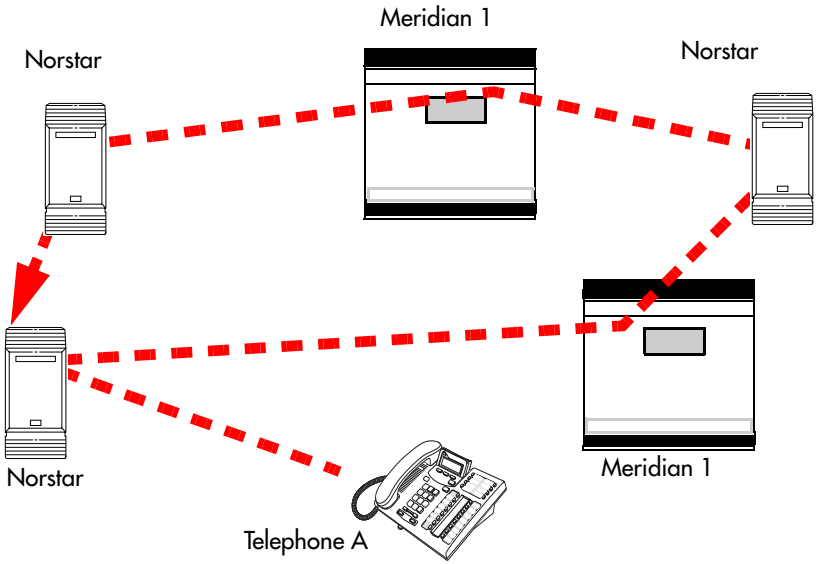

Meridian configurations:

The following settings are required on the Meridian system, using LD15:

- REQ = CHG
- TYPE = CDB
- Net_DATA=Yes
- CUST=0
- ISDN=Yes
- RCNT(5)
- PSTN=No
- TNDM=0-31(15)
- PCMC=0-31(15)
- SATD=0-5(1)
- Number plan CDP, UDP, and access code configured using LD 86, 87 and LD90

Trunk Route Optimization

TRO finds the most direct route through the network to send a call between nodes. This function occurs during the initial alerting phase of a call.

Business Communications Manager configurations:

- Under Network Settings, MCDN, set TRO to Y(yes).
- Configure call routing for all optimal routes.
- Configure Call Forward (All Calls, No Answer, Busy) or Selective Line Redirection to use the optimal routes.

This feature avoids the following situation: A call originating from a Norstar system may be networked to a Meridian system, which, in turn, is networked to another Meridian system, which is the destination for the call. If the call routes through the first Meridian (M1) to reach the second Meridian (M2), two trunks are required for the call. An optimal choice is a straight connection to M2. TRO finds these connections and overrides the less-efficient setup.

The following figure shows two call paths. The first route, through the Meridian, demonstrates how a call might route if TRO is not active. The second route, that bypasses the Meridian, demonstrates how TRO selects the optimum routing for a call.

Call paths with and without TRO

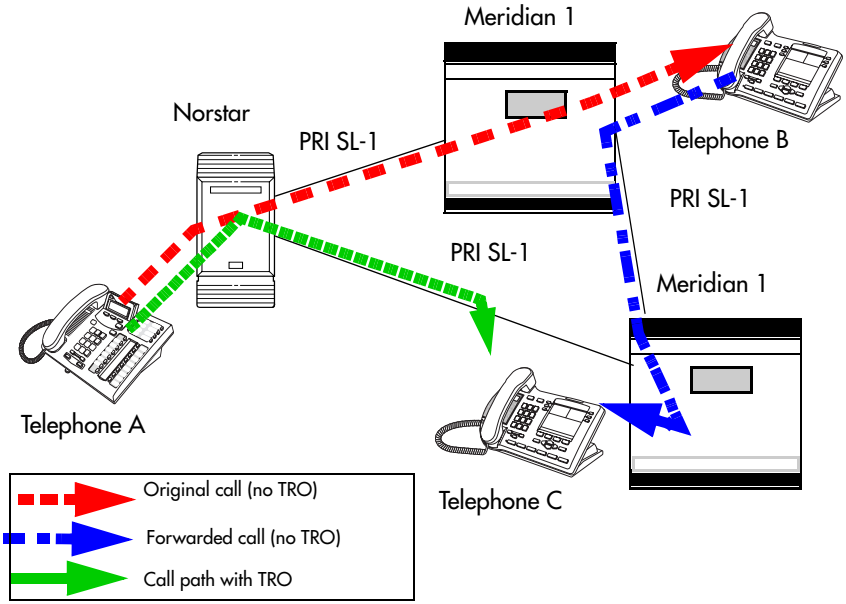

If you are using a Meridian 1 system as part of the network, you need the following programming for each system:

M1 TRO set to yes for Card1/Mod 1 Norstar route: LD 16 TYPE: RDB Cust: xx Rout: 0-511 TRO: Yes

Norstar configuration:

1. With the display showing `System prgming` press [Next] until the display shows `NetworkServices`.
2. Press [Show] until `MCDN` displays.
3. Press [Show]. `NetwkICCL:` displays.
4. Press [Next] until `TRO:Y` displays.

5. Press CHANGE to choose either Y (yes) or N (no).

Trunk Anti-tromboning

TAT is a call-reroute feature that works to find better routes during a transfer of an active call. This feature acts to prevent unnecessary tandeming and tromboning of trunks. This action occurs after the speech path has been established.

Note: This feature is not applicable for alerting calls.
This feature does not activate if TRO is set to yes.

Norstar configuration:

1. With the display showing System prgming press [Next] until the display shows NetworkServices.
2. Press [Show] until MCDN displays.
3. Press [Show]. NetwkICCL: displays.
4. Press [Next] until TAT displays.
5. Press CHANGE to choose either Y (yes) or N (no).

Meridian configuration

The following must be set on the Meridian 1 before this feature can activate:

- MCDN PRI D-channel must have TAT set to yes (using LD17 and TRMB in LD17)
- 1.5 MB/2MB DTI/PRI card configured as PRI with interface type of SL1
- NCRD parameter set to yes for the MCDN PRI routes
- Remote capabilities configured for the D-channel (using LD 17) to include ND2

The diagram below shows how TAT reduces the line requirements. The solid line shows Telephone A calling Telephone B and being transferred over an additional PRI line to Telephone C. With TAT active, the same call is transferred to Telephone C over the same PRI line (the dashed-line).

Call paths with and without TAT

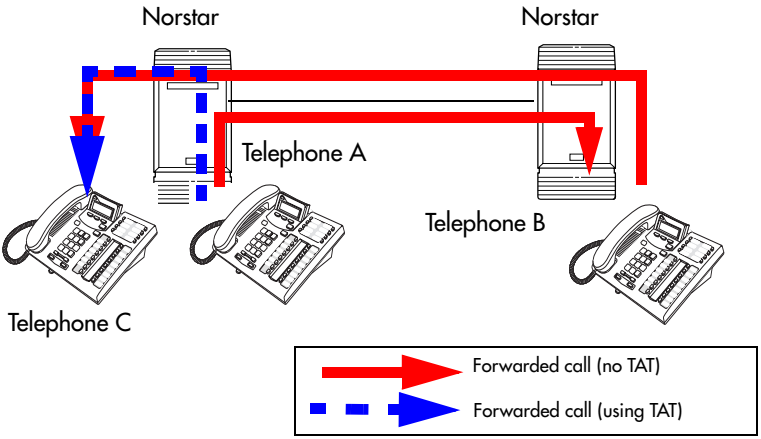

MCDN voice mail/auto attendant call features

Besides the general MCDN features described in *MCDN trunk call features* on page 151, an MCDN connection with a Meridian 1 with attached voice mail system, also provides some special call features.

MCDN Meridian 1 attendant MCDN features

Meridian attendant features	• message waiting indication (MWI) • camp-on • break-in

Note: Although these features have the same functions as Camp-on and Priority calls within each Norstar system, MCDN camp-on and break-in from M1 can access all network telephones connected to the centralized voice mail system.
To all Norstar systems on the private network, the centralized voice mail system is viewed as an external call by each system, even though the dialing plan configurations makes it seem like callers are making local calls.

Message Waiting Indication

MWI allows the host system (Meridian 1) to notify a telephone on the Norstar system of a call waiting.

Special requirements:

- Over a PRI SL-1 line: Meridian 1 must be on Release 19 or greater.
- Meridian 1 requires the network ID of the Norstar system, which is defined under `Dialing Plan, Private Network`. This is a number between 1 and 27, and is defined by the Meridian system administrator.

The following figure demonstrates how the Meridian responds when a call is forwarded to a Meridian Mail mailbox.

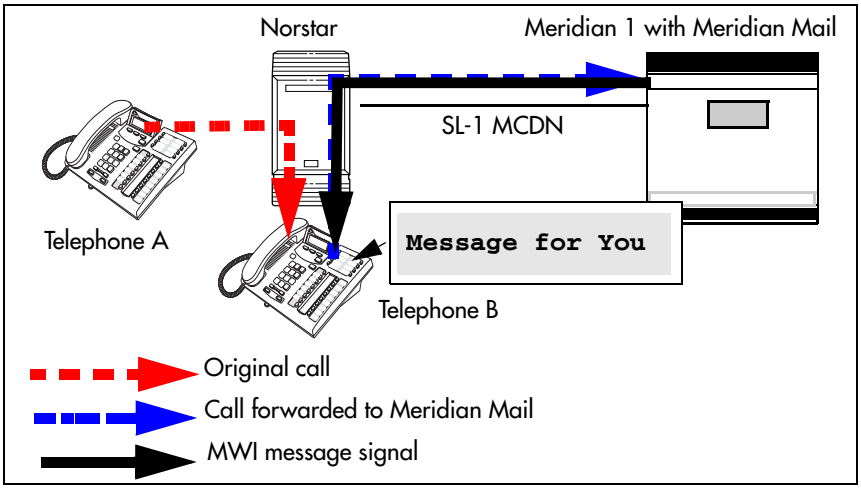

MWI programming

Norstar programming
Telco features, VMsg Ctr Tel Numbers: • Voice Message Center 1 set to DES code plus M1 voice mail DN
Lines, Telco features: • choose Voice message Center 1
Terminals&Sets, Telco features: • assign target line for each set • set External VMsg to Y

M1 programming
RCAP set to MWI and ND2 RLS ID set to 25

Camp-on

A call received by the Meridian attendant can be assigned to a telephone anywhere in the MCDN network, when the following situations are valid:

Attendant tip - *If the target telephone is busy, and is not forwarded to a prime telephone, the attendant receives a tone. If the camp-on is successful, there is no tone. However, due to the delay within the target system in determining if the telephone is busy and if the call will be transferred to a prime set, the Meridian attendant needs to wait about five seconds after attempting to camp a call before hanging up. Otherwise, the call will be lost if the telephone is busy.*

- the target telephone rings busy when the attendant calls and there are no free keys on target telephone
- DND regular feature is inactive
- DND on busy feature is inactive

The target user sees that there is a call camped on the telephone. The called user can then:

- clear a busy lines and take the call
- choose to reject the call, using F814
- indicate Do Not Disturb, using F85.

The diagram below demonstrates the call path for a Meridian attendant to camp a call on a telephone in the Norstar system.

Camping a call on a network telephone

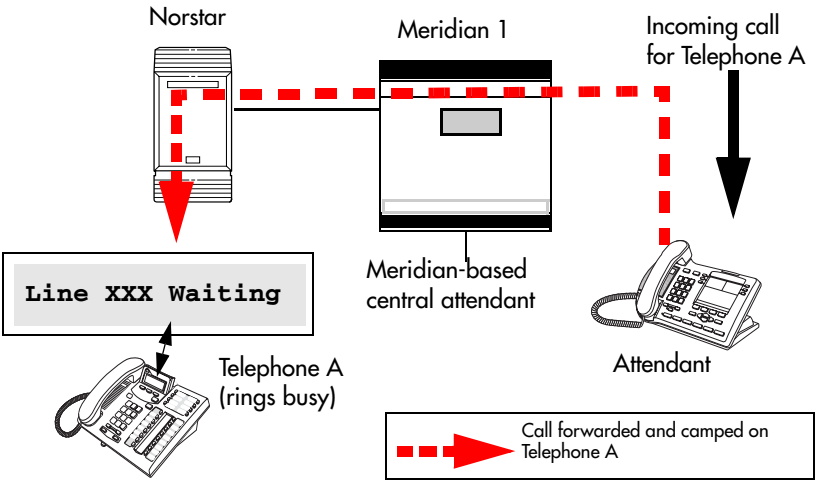

Break-in

The Meridian attendant can break into an on-going call from a telephone in the Norstar system, if these situations are valid:

Break-in can occur when these situations are valid:

- Target Norstar telephone is busy but still has a free intercom or line key.
- There is no camped call on the target telephone.
- DND busy is turned on, although the attendant can override a busy signal, if it is turned off, by pressing the **BKI** key.
- Prime set is also busy, with no free key, and with DND turned on.
- Attendant capability (intrusion) is high (2), and higher than either the target telephone or the caller the target telephone owner is busy with.

A warning tone occurs for both parties on the call before the actual break-in occurs.

The diagram below demonstrates the call path for a Meridian attendant to break into a call between telephones in the Norstar system.

Breaking into a Norstar call path

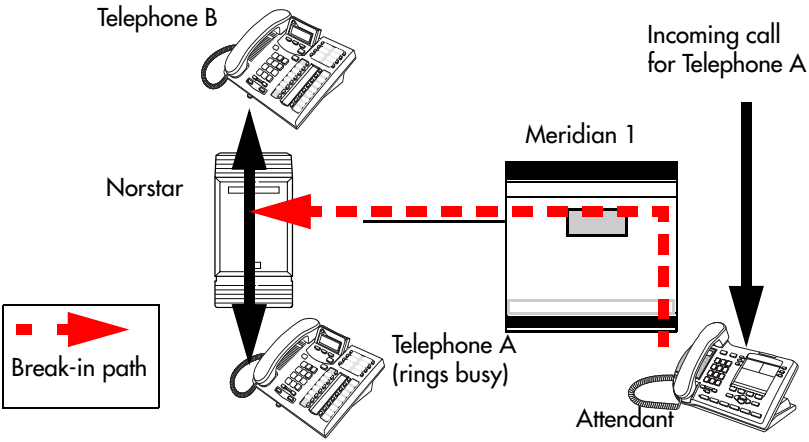

Only post-dial break-in is supported by MCDN:

1. Attendant dials destination number.
2. If a busy tone is heard, the attendant presses the BKI button.
   Attendant is given access to the conversation.

You can set a level of priority that will determine if a telephone will allow an attendant to break in. This is referred to as setting the Intrusion level.

How the intrusion hierarchy works:

- Break-in is allowed if Attendant telephone is High and caller telephone is Medium.
- Break-in is not allowed if Attendant telephone is Medium and caller telephone is High.

Set the Intrusion level for each telephone under Capabilities.

1. At Terminals&Sets, press [Show] and enter the DN number for the telephone to which you want to add intrusion levels.
   The telephone displays <set number>:<set number> or <name>.
2. Press [Show]. The display shows Line Access.
3. Press [Next] until you reach Capabilities.
4. Press [Show]. The display shows Fwd no answer.
5. Press [Next] until you reach Intrusion.
6. Press [Show]. The display shows Protect lvl.
7. Press CHANGE to select None, Low, Med, or High.

Central voice mail and Auto Attendant with Norstar

You can use Norstar voice mail (NVM) and Auto Attendant running on a Norstar Application module (NAM) platform as the central voice mail/auto attendant node for your MCDN network. However, this configuration does not allow centralized camp-on or break-in, since these are Meridian-voicemail-based features.

Using NVM requires that all nodes on the network are set up with the CDP dialing rules. You can have a maximum of 10 nodes on a Norstar-based network if you use all three DTI cartridges.

Note: Ensure you have the latest version of NVM if you want to set up this type of centralized system.

Configuring centralized voice mail

System configuration for centralized voice mail depends on where the NAM is connected. The system with the NAM is configured using the voicemail DN and a target line. The systems that are remote to the NAM are configured through the `Telco features` sections.

Installation instructions about installing Norstar voice mail as a centralized voice mail system, are explained in the addendum titled: *Installing Norstar Voice Mail as a Centralized Voice Mail System*. This addendum includes details about voice mail configuration, as well as the Norstar Modular ICS configuration that is included in the following sections.

Local system

To set up the local system, you need to assign a target line to the DN for the voice mail system, then enter that DN into the target line record.

1. After you enter your password, at the `Terminals&Sets` prompt, press [Show].
   The prompt displays: `Show set:`
2. Enter the DN number for the voice mail system.
3. Press [Show]. The prompt displays `Line access`.
4. Press [Show]. The prompt displays `Line assignment`.
5. Enter the target line number for your voice mail system.
6. Press CHANGE to change the setting for each line to one of the following: `Unassigned`, `Ring only`, `Appr&Ring`, and `Appr only`.

7. Press [Heading] until you reach the top level, then press [Next]. The prompt displays `Lines`.
8. Press [Show]. The prompt displays `Show line`.
9. Enter the target line number you entered in step 5.
10. Press [Show]. The prompt displays `Trunk/line data`.
11. Press [Show]. The prompt displays `Line Type`.
12. Press [Next]. The prompt displays `Rec'd #`.
13. Enter the DN for the voice mail system.
14. Exit programming.

Remote system

On the nodes that are not directly connected to the central voice mail system, you need to use the `Telco Features` headings to identify the route to the voice mail system.

1. After you enter your password, press [Next] until the prompt displays `Telco Features:`
2. Press [Show]. The prompt displays `VMsg Center tel#s`.
3. Press [Show]. The prompt displays `VMsg Center 1`.
4. Press [Show]. The prompt displays `Use:`.
5. Press CHANGE to until you reach `Routing tbl`.
6. Press [Next]. The prompt displays `Tel #:`.
7. Enter the number to access the external voice mail system.

Set Telco features for the VM DN

1. Press [Heading] until you reach the top level, then press [Next] until the prompt displays `Terminals&Sets`.
2. Press [Show]. The prompt displays: `Show set:`
3. Enter the DN for the voice mail system.
4. Press [Show]. The prompt displays `Line access`.
5. Press [Next] until the prompt displays `Telco features`.
6. Press [Show]. The prompt displays `Feature Assign`.
7. Press [Show]. The prompt displays `Show line`.
8. Enter the line number that connects to the system for the central voice mail system.
9. Press [Show]. The prompt displays `Caller ID Set`.
10. Press [Next] until the prompt displays `Ext1 VMsg set`.
11. Press CHANGE to select `Y` (yes).

Set Telco features for the target line

1. Press [Back] until you reach the top level, then press [Next] until the prompt displays `Lines`.
2. Press [Show]. The prompt displays: `Show line:`
3. Enter the target line number for the voice mail system.
4. Press [Show]. The prompt displays: `Trunk/line data:`
5. Press [Next] until the prompt displays `Telco features`.
6. Press [Show]. The prompt displays `VMsg Center 1`.

7. Press [Show]. The prompt displays `Use:`.
8. Press `CHANGE` to until you reach `Routing tbl`.
9. Press [Next]. The prompt displays `Tel #:`.
10. Enter the number to access the external voice mail system.
11. Exit programming.

Using centralized voice mail

If you use NVM, ensure that you provide the correct user cards for system access. Users with telephones connected to the Meridian or Norstar unit on which NVM is installed, use internal voice mail feature codes to use the system (FEATURE 981, and so on). Users on other nodes of the system, use the remote access codes, which are similar to the codes they would use if the central voice mail system was the Meridian-based system.

Note: Meridian mail and Norstar voice mail can co-exist on the same Meridian, however, users can only be configured for one of the systems.

Configuring Centralized Auto Attendant (CAA)

System configuration for centralized Auto Attendant depends on where the NAM is connected. The system with the NAM is configured using the CAA DN and a target line. The systems that are remote to the NAM are configured through the `Telco features` sections.

All nodes must have a unique Private Network Identifier (PNI), which is defined under `Dialing Plan`. On each node, as well, the PNIs of adjacent nodes are programmed under `Hardware`.

Assigning PNIs

1. After you enter your password, press [Next] until the prompt displays System Prgrming:
2. Press [Show]. The prompt displays Hunt groups.
3. Press [Next] until the prompt displays Dialing Plan.
4. Press [Show]. The prompt displays Private Network.
5. Press [Show]. The prompt displays Type.
6. Press CHANGE to until you reach CDP.
7. Press [Next]. The prompt displays PrivNetID.
8. Enter the private network ID for your system.

Assigning PNIs for adjacent nodes

1. After you enter your password, press [Next] until the prompt displays Hardware:
2. Press [Show]. The prompt displays Show module.
3. Enter the module where the PRI card you have configured for SL-1 resides.
4. Press [Show]. The prompt displays CdX-KSU.
5. Press [Show]. The prompt displays Card type.
6. Press [Next]. The prompt displays Lines.
7. Enter the line number you want to configure.
8. Press [Show]. The prompt displays Protocol.
9. Ensure that this displays SL-1.
10. Press [Next]. The prompt displays PrivNetID:.
11. Enter the PNI of the adjacent node.

12. Repeat these steps for all the modes that are directly adjacent to your system.

Local system

To set up the local system, you need to assign a target line to the DN for the voice mail system, then enter that DN into the target line record.

1. After you enter your password, at the `Terminals&Sets` prompt, press [Show].

   The prompt displays: `Show set:`

2. Enter the DN number for the Auto Attendant.
3. Press [Show]. The prompt displays `Line access`.
4. Press [Show]. The prompt displays `Line assignment`.
5. Enter the target line number for the Auto Attendant system.
6. Press CHANGE to change the setting for each line to one of the following: `Unassigned`, `Ring only`, `Appr&Ring`, and `Appr only`.
7. Press [Heading] until you reach the top level, then press [Next]. The prompt displays `Lines`.
8. Press [Show]. The prompt displays `Show line`.
9. Enter the target line number you entered in step 5.
10. Press [Show]. The prompt displays `Line Type`.
11. Press [Next]. The prompt displays `Rec'd #`.
12. Enter the DN for the Auto Attendant system.
13. Exit programming.

Remote system

On the nodes that are not directly connected to the central Auto Attendant system, you need to use the Telco Features headings to identify the route to the system.

1. After you enter your password, press [Next] until the prompt displays Telco Features:
2. Press [Show]. The prompt displays VMsg Center tel#s.
3. Press [Show]. The prompt displays VMsg Center 1.
4. Press [Show]. The prompt displays Use:.
5. Press CHANGE to until you reach Routing tbl.
6. Press [Next]. The prompt displays Tel #:.
7. Enter the number to access the external Auto Attendant system.

Set Telco features for the CAA DN

1. Press [Heading] until you reach the top level, then press [Next] until the prompt displays Terminals&Sets.
2. Press [Show]. The prompt displays: Show set:
3. Enter the DN for the Auto Attendant system.
4. Press [Show]. The prompt displays Line access.
5. Press [Next] until the prompt displays Telco features.
6. Press [Show]. The prompt displays Feature Assign.
7. Press [Show]. The prompt displays Show line.
8. Enter the line number that connects to the system for the central voice mail system.

9. Press [Show]. The prompt displays `Caller ID Set`.
10. Press [Next] until the prompt displays `Extl VMsg set`.
11. Press CHANGE to select `Y` (yes).

Set Telco features for the target line

1. Press [Heading] until you reach the top level, then press [Next] until the prompt displays `Lines`.
2. Press [Show]. The prompt displays: `Show line:`
3. Enter the target line number for the voice mail system.
4. Press [Show]. The prompt displays: `Trunk/line data:`
5. Press [Next] until the prompt displays `Telco features`.
6. Press [Show]. The prompt displays `VMsg Center 1`.
7. Press [Show]. The prompt displays `Use:`.
8. Press CHANGE to until you reach `Routing tbl`.
9. Press [Next]. The prompt displays `Tel #:`.
10. Enter the number to access the external Auto Attendant system.
11. Exit programming.

Voice mail configuration

On the voice mail system, set the following parameters:

- Set Redirected DN to Yes.
- Under the F983 AA prompt, set ANS: Y for the voice mail DN assigned target line.
- Under F983 dial 77 and set External init as Y.
- From the CVM/CAA lines, use the default greeting table 1.

For detailed directions, refer to the addendum titled: *Installing Norstar Voice Mail as a Centralized Voice Mail System*.

Customer Use

This section shows sample configurations for different types of network access. Each example has four parts:

- A scenario explains the goal of the call and what is required to achieve it.
- A diagram shows the network configuration that supports the application.
- A list shows the Norstar hardware required to support the configuration.
- Tables show the programming. Only those settings that are important to network access are described.

Public network

The calls described in this section all originate from the public network. Callers dial in using a public DN into the system.

Call one or more Norstar telephones

Ms. Nelson is a bank customer with a question for an accountant. She dials the number that maps onto target line 203. All of the telephones ring in the accounting department.

Hardware: ICS, a Trunk Module with a DID Trunk Cartridge, or a DTI with lines programmed as DID.

Trk/Line Data	Rec'd # Line 051	4321 (for Line 203) DID
Rec'd # length	Rec'd # length	four digits (can be from three to seven digits, but must match number of digits sent by central office)

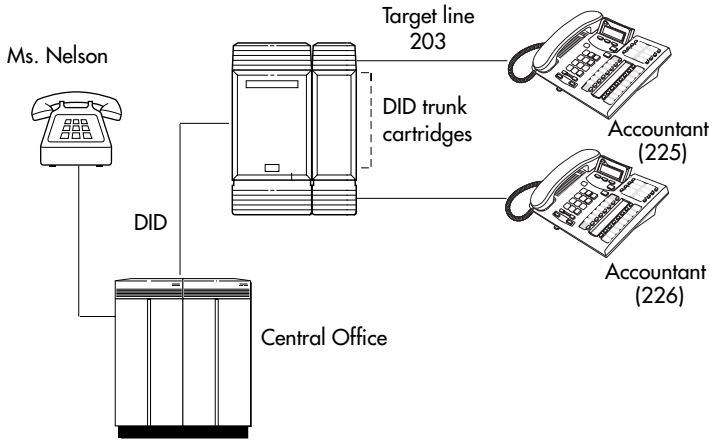

Call Norstar and select tie lines to a private network

A manager in Georgia wants to use the tie lines at headquarters to call Washington. He dials a telephone number that maps onto the DISA DN, enters a Class of Service (COS) password, then dials a line pool access code to select a tie line to Washington.

Using tie lines

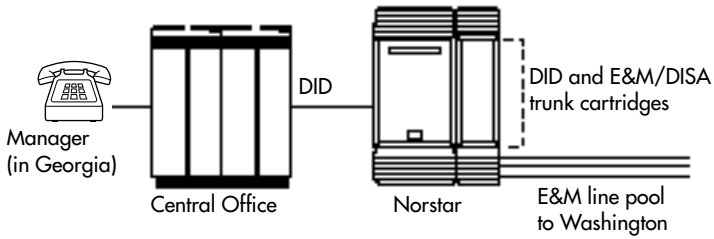

Hardware: ICS, a Trunk Module with a DID Trunk Cartridge, two E&M/DISA Trunk Cartridges for the three trunks in the line pool to Washington, or a DTI with one DID line and three E&M lines.

Incoming trunk:		
Trk/Line Data	Line 049	DID
Access codes	DISA DN	5321
Rec'd # length	Rec'd # length	four digits (three to seven digits, but must match number of digits sent by central office)
Outgoing trunk:		
Trk/Line Data	Line 053 Line type	E&M Pool F
Access codes	Line pool F	6 (up to four digits)
COS pswds		Define restrictions. Define remote access pkgs. Assign a restriction filter to the line. Assign COS passwords and filters for each Class of Service.

Call Norstar and select lines to the public network

Gord wants to make a long-distance business call from home. To avoid being charged, he dials the telephone number that maps onto the Auto DN at work. After hearing the dial tone, Gord dials a line pool access code to select a line to the public network. He then dials the long-distance number.

Using DID to dial long-distance

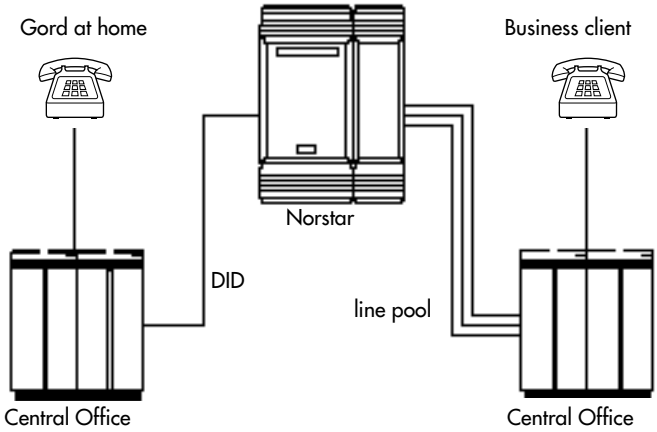

Hardware: ICS, a Trunk Module with a DID Trunk Cartridge or DTI with several DID lines.

Incoming trunk:		
Trk/Line Data	Line 049	DID
Access codes	Auto DN	4321
Rec'd # length	Rec'd # length	four digits (can be from three to seven digits, but must match number of digits sent by central office)
Lines /Restrictions and Remote access		Define restriction filters. Define remote access packages. Assign a remote restriction and remote package to the line.

Outgoing trunk:		
Trk/Line Data	Line 001 Line type	Loop Pool A
Access codes	Line pool A	1234
Lines /Restrictions		Assign a restriction filter to the line.

Private network

All the calls described in this section originate from within the networked system.

Call one or more Norstar telephones

The production supervisor in Houston selects the less-expensive company Tie line to call the manager at the Administration office in Dallas. Once the line is selected, the production supervisor dials the digits that will map onto the target line of the manager in Dallas.

Calling from a Norstar to a remote PBX

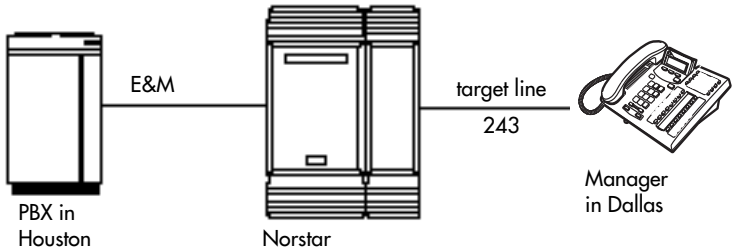

Hardware: ICS, a Trunk Module with an E&M/DISA Trunk Cartridge or a DTI with an E&M line.

Incoming trunk:		
Trk/Line Data	Rec'd # Line 049 Ans Mode	4321 (for target line 243) E&M Auto

Rec'd # length	Rec'd # length	four digits (can be from three to seven digits, but must match number sent by central office)

Use tie lines to other nodes in the private network

At a branch office, Joan selects a tie line to the main office. After hearing the dial tone, she dials a line pool access code to select another tie line to a branch office in the next state.

Calling within the network through Tie lines

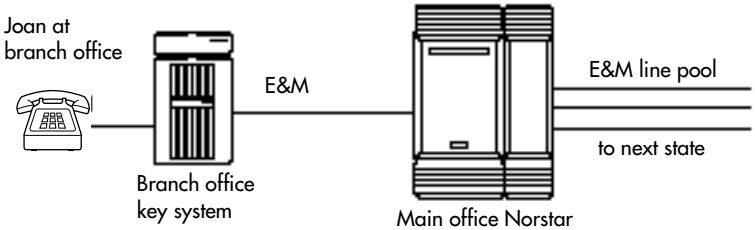

Hardware: ICS, a Trunk Module with two E&M/DISA Trunk Cartridges, for the three lines in the line pool and the one incoming line, or a DTI with four E&M lines.

Incoming trunk:		
Trk/Line Data	Line 049 Ans mode	E&M Auto
Under Lines / Restrictions / Remote access		Define restriction filters. Define remote access packages. Assign a remote restriction and remote package to the trunk.
Outgoing trunk:		
Trk/Line Data	Line 050 Line type	E&M Pool D
Access codes	Line pool D	71 (can be from one to four digits)
Lines / Restrictions		Assign a restriction filter to the trunk.

Select lines to the public network

Liz in Memphis, needs to call long-distance to a client in New York. She selects a tie-line to the branch office in New York. After hearing the dial tone, she dials a line pool access code to select a line to the public network. Then, she dials the external number as a local call.

Using a Tie line and line pool to call remote PSTN

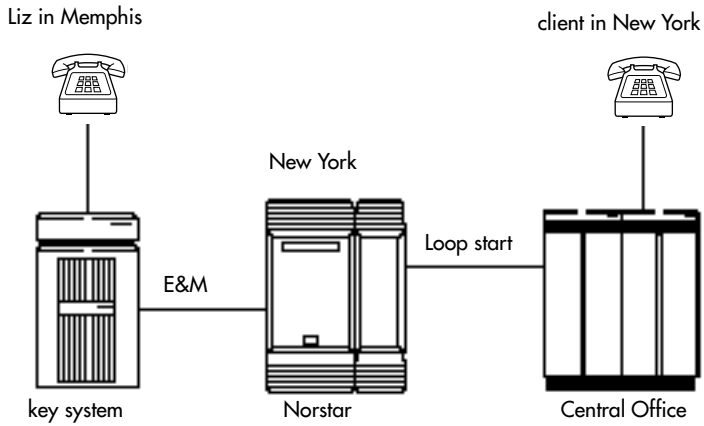

Hardware: ICS, a Trunk Module with an E&M/DISA Trunk Cartridge or DTI with an E&M line.

Incoming trunk: Trk/Line Data	Line 049 Ans mode	E&M Auto
Under Lines / Restrictions and Remote access		Define restriction filters and remote access packages. Assign a remote restriction and remote package to the trunk.
Outgoing trunk: Trk/Line Data	Line 001 Line type	Loop Pool B
Access codes	Line pool B	73 (can be one to four digits)
Lines / Restrictions		Assign a restriction filter to the line.

Select E&M trunks to the private network

For a confidential call, the Montana sales manager presses the line button for a private E&M trunk to the Oregon office. This automatically alerts at the line appearance on the telephone of the Oregon sales manager.

Using private E&M trunks for remote calls

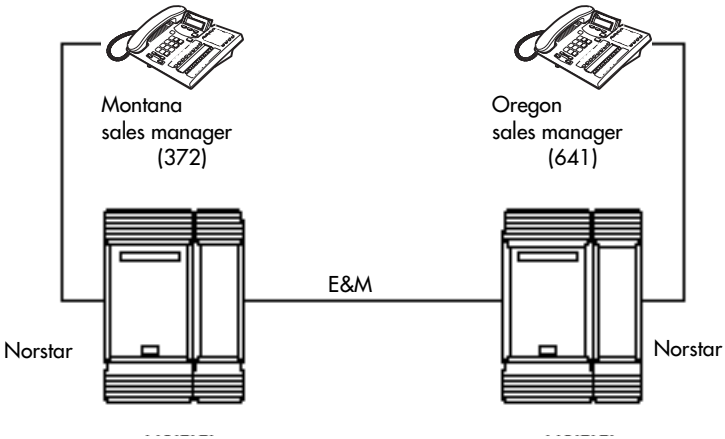

Hardware: (for both systems) ICS, a Trunk Module with an E&M/DISA Trunk Cartridge or a DTI with an E&M line.

Montana:		
Outgoing trunk:		
Trunk Data (Line 049)	Line	E&M
Line Data (Line 049)	Line type	Private to 372
Oregon:		
Incoming trunk:		
Trunk Data (Line 057)	Line	E&M
	Ans mode	Manual
	Line type	Private to 641

Norstar Line Redirection feature

The branch office is receiving more calls than it can handle, so it redirects one of its lines to the main office. All calls that come in on target line 232 will be routed out on line 003 to the main office. Whenever a call is redirected, the target line and outgoing line will be busy for the duration of the call.

Line redirection routes

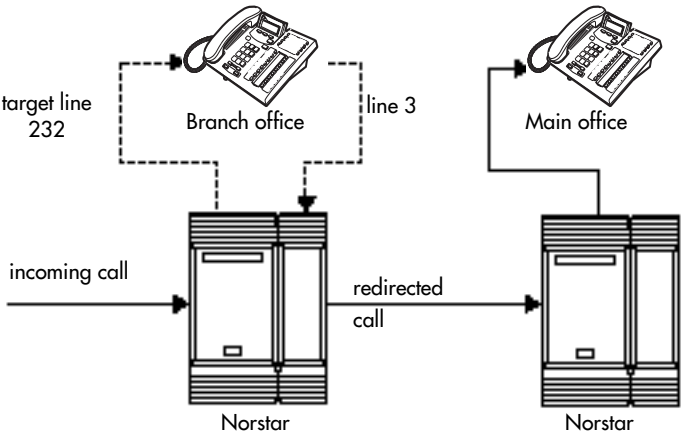

Hardware: ICS, an E&M/DISA Trunk Cartridge if the incoming trunk is E&M or a DID Trunk Cartridge if the incoming trunk is DID, or a DTI with one E&M line or one DID line.

Tips - *Any line appearance on a telephone can be selected as the incoming line to be redirected. Restriction filter restrictions on the line are checked against the filter in effect at the time a call is redirected, not when redirection is programmed.*

A target line cannot be selected as the outgoing line for redirection.

The incoming trunk must have disconnect supervision.

Incoming trunk: Trk/Line Data	Line 001: Trunk mode: Ans mode: OR Line 049: OR Line 053: Ans mode: Rec'd #: (for target line 232)	Loop Super Auto DID E&M Auto 4321
Rec'd # length	Rec'd # length:	four digits (can be from three to seven digits, but must match number of digits sent by central office)
Outgoing trunk: Trk/Line Data	Line 003: OR Line 054:	Loop E&M
Capabilities	Allow redirect:	Y

ETSI, MCDN and Network features

If your system is running Profile 2, and you are using ETSI PRI lines with SL-1 MCDN protocol to network your systems, your network has access to all the MCDN features described in the preceding sections, starting with "Private networking using PRI SL-1" on page 127. MCDN features are set up under `Network Features, MCDN`.

In addition, ETSI lines can provide the following CO network features. Availability of these features is first determined by your service provider, and secondly by turning on the features under `Network Features, ETSI`.

TIP - *In version 6.1 or newer software you do not require a PRI keycode to use ETSI PRI lines, however, if you want to the line to use the ETSI MCDN features, you must obtain and enter an MCDN keycode.*

Network Call Diversion

Norstar Network Call Diversion (NCD) is a network function that allows forwarding and redirection of calls outside the Norstar network when using an ETSI ISDN line. Functionality is similar to that of External Call Forward (ECF).

NCD redirects calls using the same line on which they arrive. Call forward is efficient since there is no need for additional outside lines.

Forwarding calls externally from an extension requires the user to enter either a Destination Code or Line Pool Access Code, and the number to which calls will be forwarded.

Examples of NCD include:

- redirecting all calls from an extension to a mobile phone
- forwarding calls to an external destination (rather than to voicemail), when an extension is busy or the user is unavailable.

Allowing NCD

Installer password required

To use NCD, you must turn the feature on in Network Services.

1. Press [Next] until the display reads System prgrming.
2. Press [Show]. The display shows Hunt groups.
3. Press [Next] until the display shows Network Services.
4. Press [Show]. The display shows Netwrk Redirection: N.
5. Press CHANGE and set to Y (yes).

Feature description

NCD is available only over ETSI ISDN lines. It can be invoked when calls are presented to Norstar/BST extensions over ISDN lines. The user must program the selected extension. Refer to *External call forwarding* on page 61

NCD is integrated with the following existing Norstar Call Forward features:

- Call Forward Unconditional (CFU)—implemented on Norstar Call Forward All Calls (CFAC) [✆] [4], and Selective Line Redirection (SLR) [✆] [8] [4], also

referred to as Line Redirection. This is programmable by the user.

- Call Forward on Busy (CFB)—implemented on Norstar Call Forward Busy.
- Call Forward on No Response (CFNR)—implemented on Norstar Call Forward No Answer.

Programming and restrictions

NCD features are accessed through existing Norstar features. Extensions requiring redirection must be programmed individually to either CFAC or SLR. CFB or CFNA must be set during programming. `Allow redirect` must be set to `Yes` for each extension, in `Terminals&Extns/Capabilities`.

Note: Any other programming applied to specific lines and extensions take precedence, for example `Restrictions(extns)` under `Terminals&Extns`.

NCD is used as long as the affected lines are ETSI ISDN, and the affected DIA lines are accessible via ISDN lines. Incoming calls are diverted back to the ISDN. If NCD fails due to network errors, ECF is invoked. If ECF cannot be executed, the incoming call is routed to the prime extension for the line.

ATTENTION!

If a line is configured to appear on several extensions with redirection programmed, predicting which extension will divert the call is not possible. This should be considered during system configuration.

An extension with CFB, CFNA and CFAC programmed will give priority to CFAC for diversion.

Selective Line Redirection

Selective Line Redirection (SLR), also referred to as Line Redirection, is enhanced for use with digital lines and operates in conjunction with NCD.

Diversion by SLR takes precedence over diversion by CFAC. An SLR line cannot be diverted by CFAC. If the call arrives on an extension with SLR programmed, a ring splash will sound (if programmed).

For information about SLR restrictions, refer to *Selective Line Redirection* on page 189. For information about redirecting lines, see Line Redirection in the *Modular Plus System Administration Guide*.

Programming Extensions

The User Interface for programming NCD is the same as for ECF.

Different types of Call Forward are available depending on the extension being programmed. Programming an extension to forward calls externally requires the user to enter a destination code or line pool number, in addition to the external phone number. Therefore, care should be taken to identify your network line types and record the available codes and line pools.

Enhanced Caller ID

When a Norstar/BST extension which has Call Line Identifier (CLID) active receives a redirected call due to NCD, the user will see the DN for the Calling Number. This is followed by a “>” and the redirecting number. This is displayed for as long as the call is active (alerting or answered) at that telephone.

If the alerting extension is not the CLID extension for that line, the line appearance can be pressed to briefly display the information. Pressing [✆] [8] [1] [1] or INFO while the call is active invokes Call Info. Call Info on MCDN SL-1 displays the redirecting number and the reason for the redirection.

Note: When Norstar requests that an incoming call be redirected by the distance network, Norstar does not inform the network of the redirecting DN. In this case, the diverted-to party will not see the diverting party DN.

Malicious caller identification (MCID)

The MCID feature allows you to use [✆] [8] [9] [7] to have call information recorded on the central office system for an incoming call on a specific line (EURO ISDN lines, only).

The user must invoke the feature code without hanging up, and within 30 seconds (time varies on different networks) after the caller hangs up.

Note: This feature must be supplied by your service provided and allowed in network programming to work. Check with your system administrator.

The following information registers on the network:

- called party number
- calling party number
- local time and date of the invocation in the network serving the called user
- service provider option: calling party subaddress, if provided by calling user)

Programming MCID capability

Installer password required

To allow MCID functionality on your system, you must turn the feature on in Network Services.

1. Press [Next] until the display reads System prgrming.
2. Press [Show]. The display shows Hunt groups.
3. Press [Next] until the display shows Network Services.
4. Press [Show]. The display shows ETSI.
5. Press [Show]. The display shows Netwrk Redirection: N.
6. Press [Next]. The display shows MCID: N.
7. Press CHANGE and set MCID to Y (yes).

Data Solutions

Examples of ISDN Scenarios

For information about various ISDN scenarios that may help you to decide on the data solution that is best for you, refer to the following web site: **http://www.nortelnetworks.com/support** and perform a Search for **TIPS**. You will need your user name and access code.

If you do not have a user name and access code, the site provides information about how to get access to this site.

ISDN applications

ISDN terminal equipment delivers a wide range of powerful business applications:

- **Video conferencing and video telephony:** Video conferencing offers instant visual and audio contact between distant parties using either studio-based or desktop ISDN terminals.
- **Desktop conferencing:** ISDN allows computer users in distant locations to share and edit any image, data or text file on their own computer screens while they discuss the information.
- **File transfer:** The ISDN network allows you to transfer files containing data, text, images, data, or audio clips, faster and cheaper than with a conventional modem.
- **Telecommuting:** Convenient retrieval, processing and storage of files is possible for the employee working at home by using ISDN lines to give high-speed access to information resources at the office.

- **Group 4 fax:** ISDN fax applications save money by increasing both transmission speed and the quality of resolution.
- **Remote LAN access:** ISDN provides an affordable and fast means for employees at remote sites, such as at home or in branch offices, to access local area networks (LANs).
- **Leased line backup:** Essential backup for leased lines can be provided using ISDN, as required, rather than duplicating costly permanent leased lines.
- **LAN to LAN bridging:** Local area network (LAN) bridge/routers allow flexible interconnection between LANs using ISDN, with charges only incurred when information is actually transmitted.
- **Internet and database access:** The fast call set up and high bandwidth of ISDN are ideal for accessing information services such as the Internet and databases.

Planning the installation

Only qualified persons should service the system.

The installation and servicing of this unit is to be performed only by service personnel having appropriate training and experience. It is critical that installers have the necessary awareness about hazards to which they are exposed in performing a task, and of the measures required to minimize the danger to themselves or other persons.

Electrical shock hazards from the telecommunication network and AC mains are possible with this equipment. To minimize risk to service personnel and users, the ICS must be connected to an outlet with a third-wire ground. In addition, all unused slots should have filler faceplates installed and the doors should be in place at the completion of any servicing.

Service personnel must be alert to the possibility of high leakage currents becoming available on metal system surfaces during power line fault events near network lines. A risk point on the ICS is the power cord earth ground pin. These leakage currents normally safely flow to Protective Earth ground via the power cord. Therefore, it is mandatory that connection to a grounded outlet is performed first and removed last when cabling the unit. Specifically, operations requiring the unit to be powered down must have the network connections (central office lines) removed first.

Planning checklist

The following section provides a checklist for the setup processes for the MICS system.

Hardware

- ☐ Verify that you have all the equipment and supplies you need to install the system. See *Required equipment* on page 197.
- ☐ Determine the location for the Integrated Communication System (ICS) and any expansion modules, telephones and other equipment.
- ☐ Install the ICS equipment. Refer to *Installation* on page 227.

Initial configuration

Turn on the equipment, and do the following procedures within 10 minutes. If you change the defaults, note the changes in the Programming record.

- ☐ Use the Profile code to access the profile interface if you require a profile that is different from the one used for North American systems. Refer to *Profile programming* on page 322.
- ☐ Use the Dialpad code to access the dialpad interface if your system uses the CCITT dialpad. Refer to *Dialpad programming* on page 326.
- ☐ Use the Startup code to access the template settings. If your system requires a non-default template. Refer to *Performing Startup* on page 327.

System configuration

- ☐ Plan and record system programming details in the *Programming Record*.
- ☐ Use the System Administrator password to make any changes to the system defaults. Enter any information required for your system lines and telephones.

Required equipment

- ☐ Integrated Communication System (ICS)
- ☐ Modular ICS ROM software cartridge
- ☐ Modular ICS NVRAM cartridge
- ☐ Trunk Cartridge(s) for the ICS
- ☐ Services Cartridge — one required for T1, PRI or BRI, two required for busy sites
  or a Combination Fiber 6-port Services Cartridge, which provides the same Services Cartridge functionality
- ☐ Digital Trunk Interface (DTI) configured for PRI
- ☐ BRI card(s) for the ICS, as required
- ☐ emergency telephones — two for ICS, one for each trunk module, as required
- ☐ Digital Phones
- ☐ ISDN devices, for example, ISDN equipment or data devices, as required
- ☐ distribution panel(s)

Expansion equipment

- ☐ Expansion Cartridge — two-port or six-port
- ☐ Combination Fiber 6-port Services Cartridge
- ☐ Trunk Module(s) (TM)
- ☐ Station Module(s) (SM)
- ☐ Trunk Cartridge(s) for the TM
- ☐ power bar

Your Norstar system requires connection to a grounded outlet.

To prevent possible injury from voltage on the telephone network, disconnect all central office and station lines before removing the plug from the electrical outlet.

The basic Integrated Communication System (ICS) supports up to 32 telephones. With the addition of Trunk Cartridges, you can connect up to 48 digital lines to the ICS.

With the addition of an Expansion Cartridge or a Combination Fiber 6-port Services Cartridge in the ICS, you can add Trunk Modules, Station Modules, Integrated Data Modules, or a combination of modules to increase your system capacity.

Installed in ICS	Additional modules allowed		
	Trunk	Station	Maximum
MICS system No Expansion cartridge (mini)	0	0	0
2-port Expansion cartridge (midi)	2	2	2
6-port Expansion cartridge (maxi)	6	6	6
XC system Combination Fiber 6-port Services Cartridge (maxi)	6	6	6

Installed in ICS	Additional modules allowed		
	Trunk	Station	Maximum
Combination Fiber 6-port Services Cartridge and 6-port cartridges (mega)	6	12	12
Two Combination Fiber 6-port Services Cartridge (mega)	6	12	12

Optional equipment

- ☐ station auxiliary power supply (SAPS)
- ☐ one or more key indicator modules (KIM) for 7316E Digital phones
- ☐ Analog Terminal Adapter (ATA or ATA2) for analog telephones connected through a digital station module
- ☐ external music source
- ☐ auxiliary ringer
- ☐ headset
- ☐ telephone loud ring amplifier
- ☐ Nortel Networks Digital Mobility Controller(s), Nortel Networks Digital Mobility basestation, Nortel Networks Digital Mobility repeaters, Nortel Networks Digital Mobility phones 74XX, and Nortel Networks Digital Mobility external antennas for the repeaters.
- ☐ uninterruptible power supply

If the system is equipped with digital lines, use an uninterruptible power supply so that the DTI keep-alive signal will continue to be sent to the network in the event of a power failure.

Equipment for installing the ICS and modules

- ☐ screwdriver
- ☐ pliers
- ☐ connecting tool (punch-down tool)
- ☐ four 19 mm (3/4 in.) wood screws for each of the mounting brackets
- ☐ 38 mm (1 1/2 in.) screws for the cable troughs (two screws for the ICS and SM, four screws for the TM)
- ☐ 19 mm (3/4 in.) thick wooden backboard

Location requirements

- ☐ minimum distance of 4 m (13 ft.) from equipment such as photocopiers, electrical motors, and other equipment that can produce electromagnetic, radio-frequency (RF), or electrostatic interference
- ☐ clean, dry, and well-ventilated
- ☐ minimum clearance of 150 mm (5 in.) above and 100 mm (4 in.) below the ICS
- ☐ the gap between the ICS and the wall should be left completely clear to allow proper heat dissipation
- ☐ temperature between 0°C and 50°C (32°F and 122°F)
- ☐ humidity between 5% and 95%, non-condensing

Spacing requirements for a typical MICS-XC 7.0 system

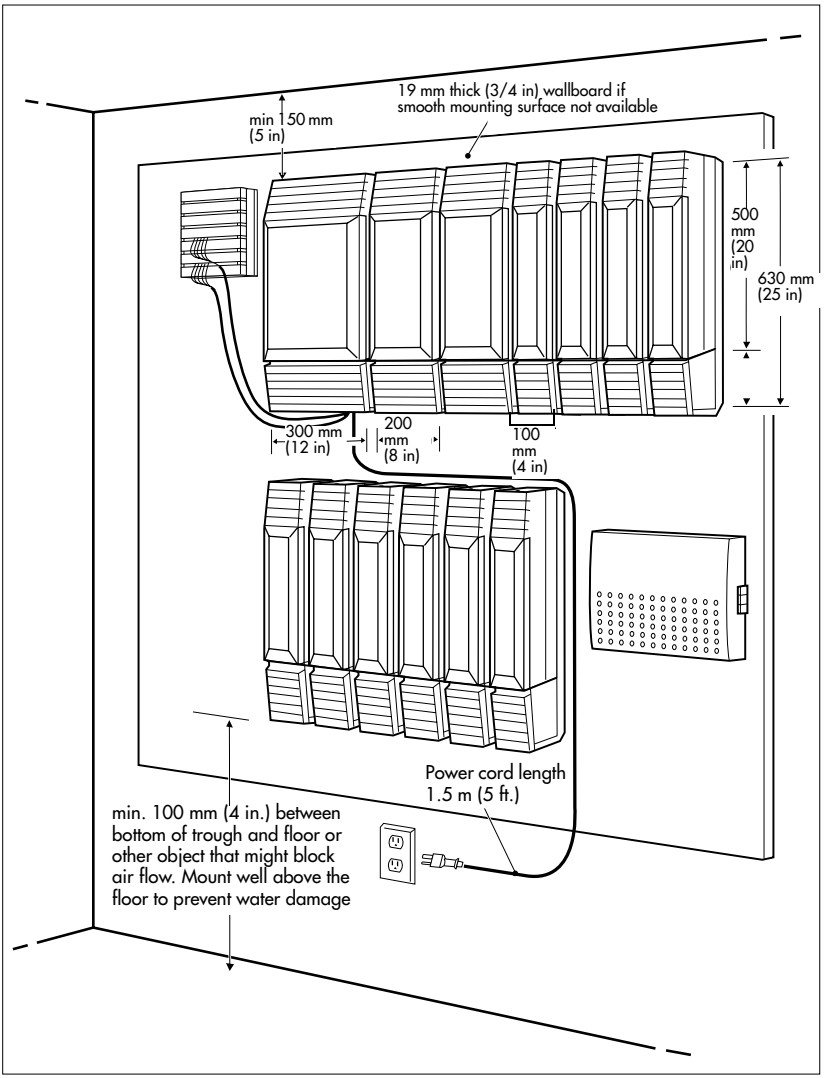

Electrical requirements

- ☐ non-switched outlet within 1.5 m (5 ft.) of the ICS
- ☐ The ICS and module power cords are 1.5 m (5 ft.) long. You may connect the ICS and modules to a power bar. The power bar must be CSA certified and UL listed with a third-wire ground.
  Do not use an extension cord between the ICS and the power bar, or between the power bar and the electrical outlet.
- ☐ AC outlet equipped with a third wire safety ground to provide shock protection and avoid electromagnetic interference
- ☐ dedicated 110 V AC nominal, 50/60 Hz, 15 A minimum service with a third-wire safety ground

Risk of electric shock.

The safety of this product requires connection to an outlet with a third-wire ground. Use only with three-prong power cord and outlet.

Check ground connections.

Ensure that the electrical ground connections of the power utility, telephone lines and internal metallic water pipe system, if present, are connected together. If they are not connected together, contact the appropriate electrical inspection authority. Do not attempt to make the connections yourself.

Configuring Trunk Cartridges

If you plan to configure lines on a Loop Start Trunk Cartridge as auto-answer, you will need an E&M Trunk Cartridge for every two auto-answer loop start lines. The E&M Trunk Cartridge provides DTMF receivers for auto-answer loop start lines. You can install three additional Trunk Cartridges in each Trunk Module. The following table shows you the line capacity of each Trunk Cartridge.

DTI configured for ETSI PRI (ICS only)	30 (Profile 2)
BRI-ST & BRI-U4	8

You can install different types of Trunk Cartridges together in the same Trunk Module. When mixing Trunk Cartridges, use a separate block on the distribution panel for each type of Trunk Cartridge.

Configuring Station Modules

Each Station Module allows you to connect up to 16 additional Norstar telephones to the system.

Mini	Midi		Maxi				Mega					
ICS	SM3	SM4	SM5	SM6	SM7	SM8	SM9	SM10	SM11	SM12	SM13	SM14
32	48	64	80	96	112	128	144	160	176	192	208	224

Tips - *The following combinations are not supported with the MICS 7.0 and MICS-XC 7.0 systems:*

- *two 2-port expansion cartridge system (four fiber ports total)*
- *a six-port and a two-port expansion combination (eight fiber ports total)*

In a fully expanded system using 72 digital channels, consider installing two service cartridges to prevent blocking of incoming calls due to lack of DTMF resources, as there are only four DTMF tone receivers per cartridge.

Internal wiring requirements

The following section describes the cable required for the Norstar loop and an ISDN S reference point S loop.

Norstar loop

- ☐ one, two or three twisted pair cables per telephone
- ☐ dc loop resistance of less than 64 Ω
- ☐ cable length (0.5 mm or 24 AWG) less than 300 m (1000 ft.)
- ☐ use of a station auxiliary power supply (SAPS) for loops 300 m (1000 ft.) to 790 m (2600 ft.). The SAPS must be a Class 2 power source that is UL listed and CSA certified.
- ☐ no bridge taps

ISDN S reference point (S Loop)

- ☐ no longer than 1000 m (3,200 ft.) for point to point
- ☐ no longer than 450 m (1,475 ft.) on a point-to-multipoint extended passive bus

- ☐ no longer than 100 m (300 ft.) for 75 ohm cable or 200 m (600 ft.) for 150 ohm cable on a point-to-multipoint short passive bus

Wiring for the S reference point (S loop) should conform to ANSI T1.605. Wiring for the ISDN U reference point (U loop) should conform to ANSI T1.601.

Verify lightning protectors.

Check the lightning protectors at the cable entry point to the building with special attention to the grounding. Report any problems to the telephone company in writing.

Equipment that is designed to be connected using internal wiring is typically not lightning protected. Norstar telephone equipment and ISDN S loops and T loops should not leave the building where the ICS is installed.

System overview

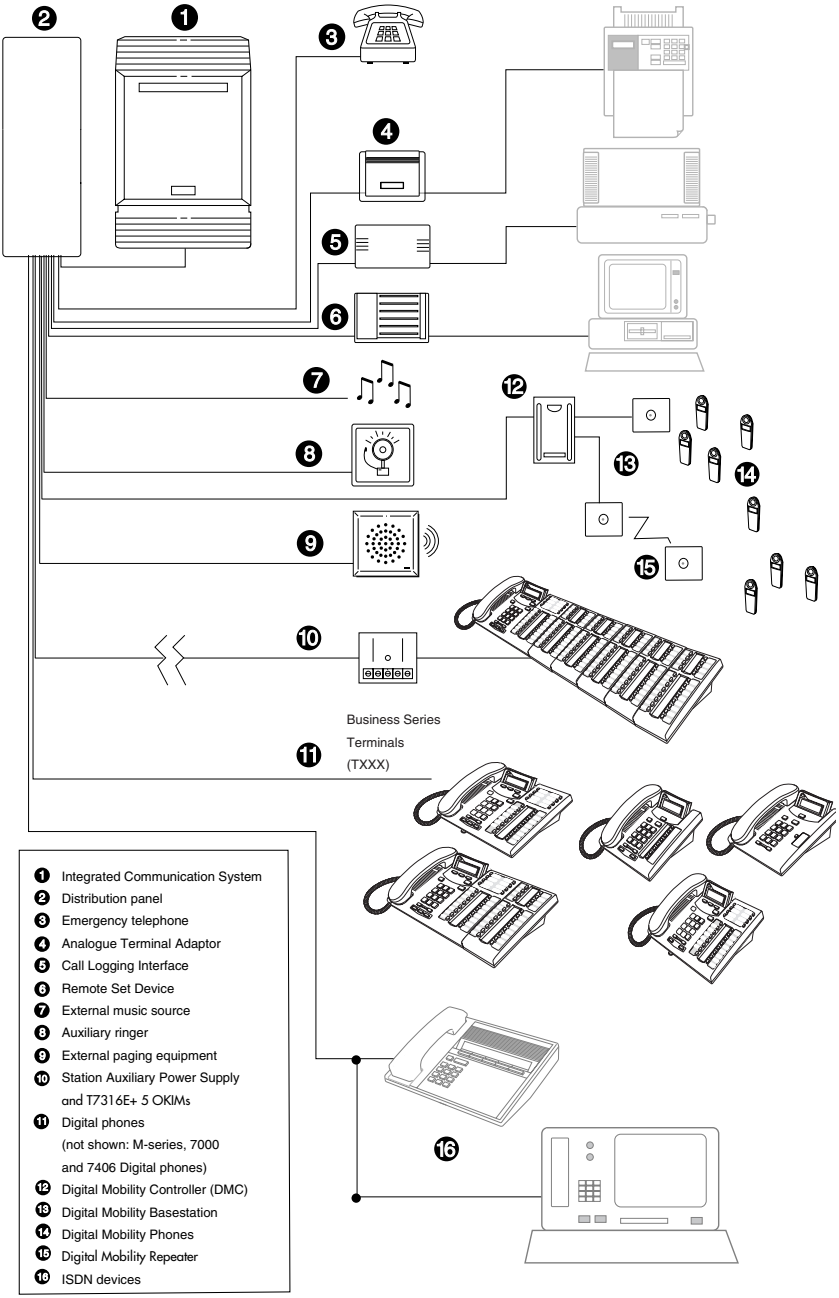

Upgrading your Norstar system

What procedure you use to upgrade your Norstar system will depend on the version of MICS software to which you are upgrading.

Upgrade note for MICs 7.0: -

Upgrades to MICS 7.0 are only supported from systems running MICS 6.0 or 6.1 software. If you are running software prior to MICs 6.0, obtain a MICs 6.1 upgrade and perform an upgrade to that software first.

Upgrade notes:

- When you are upgrading from a 4.1 or later system, ensure that you have a release version 2 NVRAM cartridge.
- When making simultaneous hardware and software upgrades (e.g. 12-port expansion plus a MICS 7.0 software upgrade), upgrade your software release before making your hardware upgrades.
- Ensure that you power up the system after the new software has been installed, but before any new hardware is added. Upgrading in this order maintains your 0X32 ICS programming data for use with MICS 7.0 and MICS-XC 7.0.
- If you are upgrading to 6.0 or 6.1 software, note that line renumbering will occur. Refer to the wiring charts in *Wiring charts* on page 260 for changes. This renumbering will also affect DN and mailbox numbering for any voice mail or CallPilot applications you have running on your system.

- When you upgrade to a 7.0 system, target lines are increased on mega systems by 32. Also on Mega systems, you can now install digital telephones on station modules installed in ports 13 and 14. Each slot supports 16 new terminal numbers.

When upgrading, Call Log information may be lost.

During a system restart, Call Log information is not saved. Make sure to notify users if a system restart is planned so any log information can be recorded first.

A loss of UTAM information occurs when upgrading US MICS-XC systems.

UTAM Recovery Codes are required. If you are upgrading the system to include Companion components.

Supported upgrades in MICS 7.0

	Target Upgrade		
Upgrading from...	**MICS 7.0**	**USA-MICS-XC 7.0**	**CDA-MICS-XC 7.0**
MICS (all versions prior to 6.1)	Use the Upgrade Tool to upgrade to MICS 6.1 software before performing a MICS 7.0 upgrade. Note that line numbering will change after this upgrade.		
MICS (all versions) 6.1 and 6.1 MR	Insert MICS CS ROM cartridge with appropriate software load.		

Legacy hardware and software upgrade notes:

All old programming is maintained when upgrading from the 0X32 Release 1 - T1 software, with the following exceptions:

- all system passwords are returned to the system defaults
- ATA ans timer setting is returned to the system default setting

There will be line renumbering on systems upgraded from software versions previous to 6.0.

When upgrading from MICS 1.1, note that the Call log space has increased in newer versions.

Reallocate log space after upgrading.

Ensure that you maintain an accurate record of your existing system programming so that you can plan your new system programming appropriately.

If you have a Norstar system with a Modular 8X24 Key Service Unit (KSU), you cannot upgrade your software with the Upgrade Tool. If you want to upgrade to MICS 7.0, you must replace your older Modular 8X24 KSU with the current 0X32 ICS (Integrated Communication System), and then program the system.

If you have a Norstar system with a Modular 0X32 ICS, you can use your ICS with the new MICS 7.0 and MICS-XC 7.0 software.

About the MICS NVRAM cartridge:

Do not install a MICS NVRAM cartridge from other MICS 7.0 systems. This will cause all the programming to be lost.

Do not attempt to use the MICS NVRAM cartridge as stored data transfer. This will cause the system to cold start.

The NVRAM assembly cartridge has a slot for a credit-card size PC-card, which are also referred to as Flash cards. These cards contain the system software and accommodate future system memory requirements and software downloading.

Upgrade systems previous to MICS 6.1 to 7.0 using the upgrade tool

To maintain your system information during the upgrade, you need to use a two or three-step upgrade process using the upgrade tool kit.**Note: The MICS 7.0 software cartridge is not part of this tool kit.**

Warning: If you do not run the upgrade tool

If your system is running MICS software prior to version 6.1 and you do not use the appropriate upgrade tools before you insert the version 7.0 cartridge, the system will drop all data and you will need to reconfigure your system when the upgrade completes.

Warning: If you do not use the correct system variant of upgrade tool and 7.0 software

If you do not use the correct variant of upgrade tools and 7.0 software, the system will cold start and you will need to reconfigure your system.

When making simultaneous hardware and software upgrades, upgrade your software release first, before making any hardware upgrades. Ensure that you power up the system after the new software has installed and test the system. At that point, you can upgrade to the new hardware.

MICS 7.0 upgrade tool kits -

NT7B80AL USA-MICS-XC S/W upgrade tool kit *contains:*

NT7B64CL USA-MICS-XC 4.1 Upgrade S/W Cartridge
NT7B64DB USA-MICS-XC 6.1 Upgrade S/W Cartridge

NT7B80AN CDA-MICS-XC S/W upgrade tool kit *contains:*

NT7B64CK CDA-MICS-XC 4.1 Upgrade S/W Cartridge
NT7B64ZB CDA-MICS-XC 6.1 Upgrade S/W Cartridge

NT7B80AP NA-MICS-DR S/W upgrade tool kit *contains:*

NT7B64CJ NA-MICS-DR 4.1 Upgrade S/W Cartridge
NT7B64ZA NA-MICS-DR 6.1 Upgrade S/W Cartridge

Using the upgrade too to upgrade to version 4.1

Use the 4.1 upgrade cartridge from the tool kit to upgrade from Modular ICS versions 1.0 to 6.0, inclusive:

1. Confirm that the 4.1 upgrade cartridge in the tool kit is the correct variation for the software running in the system.
2. Power down.
3. Disconnect all amphenol cables.
4. Remove the power to the ICS and all associated modules. Disconnecting the power ensures protection for electronic components and that the data stored in the feature cartridge will not be corrupted.

5. Remove the existing software cartridge.
6. Insert the appropriate MICS upgrade tool software cartridge.
7. Reconnect all amphenol cables.
8. Power up. Wait until display flashing stops. `Insert MICS Card` is displayed.

   If no alarm-event messages are observed, the upgrade to the ICS 4.1 software is complete and you can continue to the next section: *"Using the upgrade tool to upgrade to version 6.1" on page 212*.

   If alarm codes are displayed, refer to the main ICS documentation for a list of alarms and events.

Using the upgrade tool to upgrade to version 6.1

Use the appropriate 6.1 upgrade cartridge from the tool kit to upgrade from MICS versions 4.1 to 6.0, inclusive:

1. Confirm that the 6.1 upgrade cartridge in the tool kit is the correct variation for the software running in the system.
2. Power down.
3. Disconnect all amphenol cables.
4. Remove the power to the ICS and all associated modules. Disconnecting the power ensures protection for electronic components and that the data stored in the feature cartridge will not be corrupted.
5. Remove the existing software cartridge.
6. Insert the appropriate MICS or CICS upgrade tool software cartridge.
7. Reconnect all amphenol cables.

8. Power up. Wait until the time and date appear on the display. Also, check for dial tone.

   If no alarm-event messages are observed, the upgrade to the ICS 6.1 software is complete and you can continue to the next section: *"Upgrade from version 6.1 or 6.1MR to version 7.0" on page 213*.

   If alarm codes are displayed, refer to the main ICS documentation for a list of alarms and events.

Upgrade from version 6.1 or 6.1MR to version 7.0

The MICS 7.0 software comes as a separately-orderable kit containing the MICS 7.0 software CS ROM cartridge and a documentation CD.

To upgrade from a system running 6.1/6.1 MR software:

1. Confirm that the 7.0 software cartridge in the is the correct variation for the software running in the system.
2. Power down.
3. Disconnect all amphenol cables.
4. Remove the power to the ICS and all associated modules. Disconnecting the power ensures protection for electronic components and that the data stored in the feature cartridge will not be corrupted.
5. Remove the MICS (6.1) CS ROM cartridge.

Note: Your system information remains on the NVRAM unit that the CS ROM cartridge fits into.

6. Insert the new MICS 7.0 CS ROM cartridge.
7. Plug the ICS back into the power source.
8. Reconnect all amphenol cables.

9. Wait for the system to reboot.

Upgrading from MICS 7.0 to MICS-XC 7.0

MICS 7.0 mini to XC 7.0 mini

1. Install XC 7.0 ROM software cartridge.
2. Use module 1 (ports 101 to 132) for telephones only and module 2 for Trunk Cartridges only.

MICS 7.0 mini to XC 7.0 midi

1. Install XC 7.0 ROM software cartridge.
2. Install two-port Expansion Cartridge in slot 2.
3. Connect trunk modules beginning at port 4 and station modules beginning at port 3.

MICS 7.0 mini to XC 7.0 maxi

1. Install XC 7.0 ROM software cartridge.
2. Install a Combination Fiber 6-port Services Cartridge in slot 2.
3. Connect trunk modules beginning at port 8 and work down and station modules beginning at port 3 and work up.

MICS 7.0 midi to XC 7.0 midi

1. Install XC 7.0 ROM software cartridge.

MICS 7.0 midi to XC 7.0 maxi

1. Install XC 7.0 ROM software cartridge.
2. Replace two-port Expansion Cartridge with either a Combination Fiber 6-port Services Cartridge or a 6-port Fiber Expansion Cartridge in ICS slot 2.
3. Connect trunk modules beginning at port 8 and work down and station modules beginning at port 3 and work up. Refer to page 234.

MICS 7.0 maxi to XC 7.0 maxi

Install XC 7.0 ROM software cartridge.

MICS 7.0 maxi to XC 7.0 mega

1. Install XC 7.0 ROM software cartridge.
2. Replace two-port Expansion Cartridge with two Combination 6-port fiber Expansion Cartridges or one 6-port Fiber Expansion Cartridge and one Combination Fiber 6-port Services Cartridge in ICS slots 1 and 2.
3. Connect trunk modules beginning at port 8 and work down.
4. Connect station modules beginning at port 3 and work up.
5. Connect station modules to ports 9 to 14.

Tips - *Trunk modules cannot be connected to the Combination Fiber 6-port Services Cartridge in slot 1. (fiber interface ports 9 through 14.*

Slots on ICS

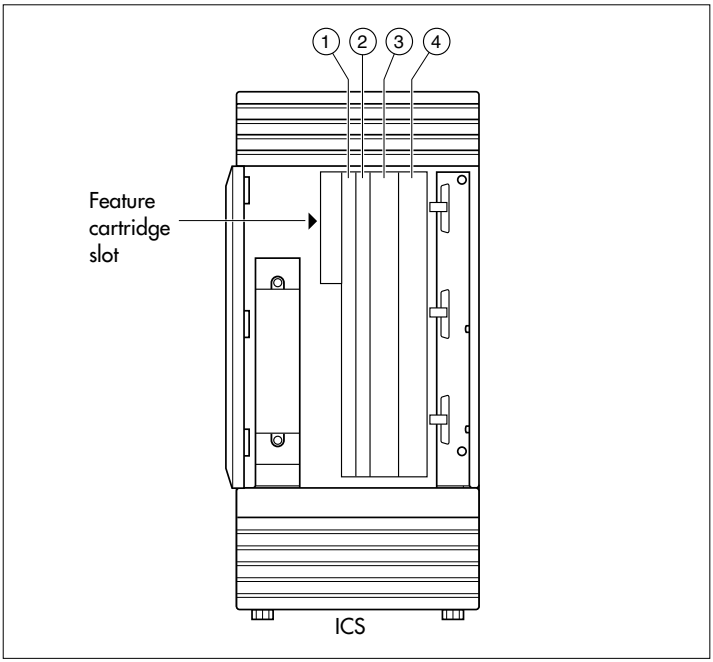

Trunk and Station Modules

If you are not adding digital T1 trunks to your system, or expanding to a mega configuration, you may reuse your existing copper Trunk and/or Station Modules with the Modular 0X32 ICS in MICS 7.0/XC 7.0. One 6-port copper expansion cartridge can be supported on the maxi configuration.

If you are adding digital T1 trunks to your system or expanding to a mega configuration, you must replace any copper Trunk and/or Station Modules with the new modules that have fiber connectors, and use a new fiber Expansion Cartridge in the ICS. You can reuse your old Trunk Cartridges in the new Trunk Module with fiber connectors.

Trunk modules cannot be installed on the second expansion (6-port) cartridge. You must relocate station modules to the second expansion cartridge to free up ports on the first 6-port expansion cartridge.

Global Analog Trunk Cartridge/CLI Cartridge

These cartridges have dip switches that may need to be set if your system is not running with the North American profile (Profile 1). Set the dip switches before you install the cartridge.

GATC dip switch settings (default is North America)(

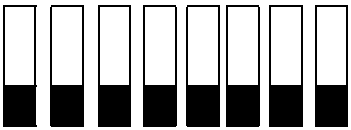

The following table lists the various dip switch settings. However, for this release, only the North America, Taiwan, and Australia settings are active.

DIP switch setting	Country profile
00000000	North America
10000000	Taiwan
01000000	Australia
11000000	*Chili
00100000	*Peru
10100000	*Argentina
01100000	*Mexico
11100000	*Sweden
00010000	*South America
10010000	*Brazil
01010000	*Norway
11010000	*France
00110000	*Germany
10110000	*Korea
XXXXXXX1	*Reserved
XXXXXX1X	*Reserved
XXXXX1XX	*Reserved
* Reserved for future development	

Off-core DTI card

MICS 6.0 introduced the opportunity to expand the number of DTI cards in a system running Profile 1 or 4 by adding a DTI card to the expansion modules in a midi or maxi system. The card must be installed in either module 3 or 4 on a midi system. On the maxi system, the card can only be installed in module 7 or 8. One DTI card requires the entire module resources, so it is installed in the first slot of the module, and the other two slots must be left empty. Ensure these slots are covered with a

blank slot cover. The off-core DTI is configured in the same way as the other DTIs on your system.

Tips - *The off-core DTI module cannot be set to either secondary or primary clock source. This module is always free run.*

Equipment note: The DTI card released in conjunction with MICS 6.0 can be used either on or off-core. However, any previous versions of the DTI card can only be used on the core KSU hardware. Refer to your equipment supplier for the correct ordering codes.

Replacing a Modular 8x24 KSU

If you are upgrading your old KSU (8X24) and adding digital T1 trunks to your new system (0X32 ICS):

1. Verify your system programming, and update your *Programming Record*.
2. Follow the procedures outlined in *Installation* on page 227 for installing a new system.

If you are upgrading your 8X24 KSU, but not adding digital T1 trunks to a 0X32 system:

1. Verify your system programming, and update your *Programming Record*.
2. Disconnect the 50-pin connector for telephones from the KSU.
3. Disconnect the 50-pin connector for external lines and auxiliary equipment from the KSU.

4. Remove power from your system.
5. If your system includes Trunk Modules and Station Modules with DS-30 copper connectors, disconnect the DS-30 copper connectors from the Expansion Cartridge.
6. Remove any cables from the KSU cable trough.
7. Remove the KSU and wall-mount bracket from the wall.
8. Install the new 0X32 ICS following the procedures in the *Installation* on page 227.
9. If your system includes Trunk Modules and or Station Modules with DS-30 copper connectors, install a compatible Expansion Cartridge with copper connectors in slot 1 of the ICS. The faceplate will cover slots 1 and 2.

> ***Do not reuse 8X24 Expansion Cartridge***
>
> You cannot reuse an 8X24 Expansion Cartridge in the 0X32 ICS. You must install a supported Expansion Cartridge.

10. If you have installed a copper Expansion Cartridge in the 0X32 ICS, clip the ferrite bead that was shipped with the Expansion Cartridge onto the ICS power supply power cord.

Locating the ferrite bead

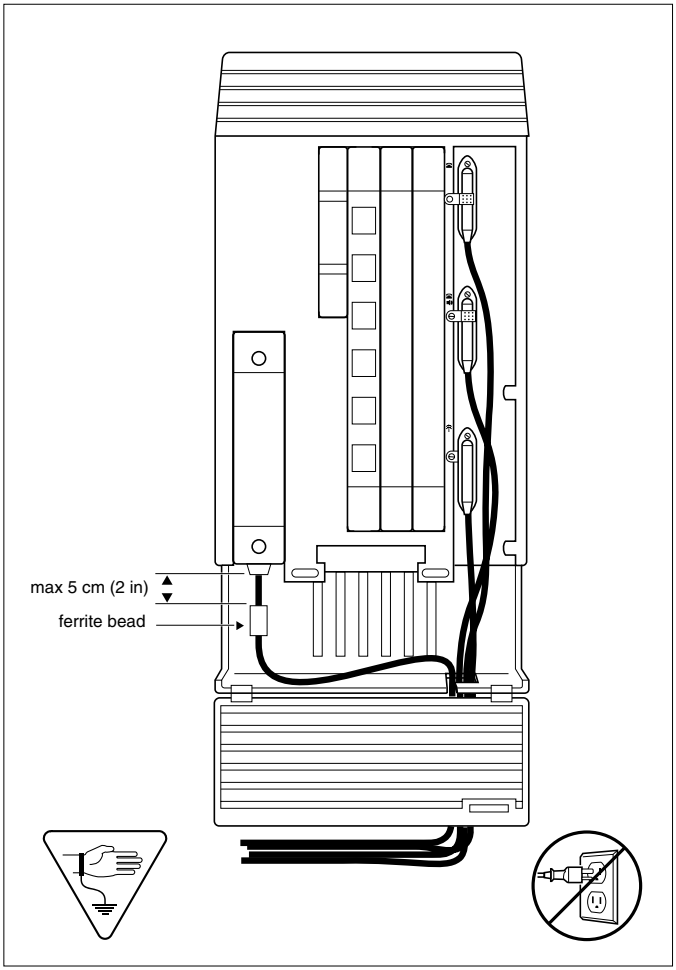

Ferrite bead required to meet EMI requirements

When using a copper Expansion Cartridge, you must install the ferrite bead on the ICS power cord to ensure that the product continues to meet FCC Part 15 Class A EMI requirements.

11. If your system includes Trunk Modules and or Station Modules with DS-30 copper connectors, reconnect the fiber interface cables to the Expansion Cartridge.
12. Power up the system.
13. Reconnect your 50-pin connector for internal telephones to the internal telephone connector on the ICS.
14. Reconnect your external line and auxiliary equipment wiring according to the procedures and wiring charts in the *Installation* on page 227. You cannot reuse your original 50-pin connector for external lines and auxiliary equipment, because the pin-outs have changed (unless connections are rewired).

DNs on Station Modules will change

If you simply reconnect the 50-pin connector for telephones on the ICS, and leave your Station Modules telephone connectors alone, your directory numbers will change.

The new 0X32 ICS can accommodate 32 telephones. The old 8X24 KSU connected only 24 telephones. Port numbering has been changed accordingly.

To preserve existing directory numbers consult the wiring charts in *Connecting the wiring* on page 255 and change the DNs using `Change DNs` in `System prgrming`.

Trunk module line numbering

In MICS 6.0/MICS-XC 6.0 software, the line numbering for all profiles was adjusted to accommodate the Profile 2 ETSI requirement of 30 lines. The chart below shows the line numbering transitions between the various versions of software. Note also that target lines have been renumbered.

If you are upgrading to version 7.0 from a 6.0 system, no line programming changes are required, however, note that an additional 32 target lines have been added for Mega systems. However, if you are upgrading from a system version previous to 6.0, you will need to note the line changes and make the programming adjustments.

Note: Line numbering varies, depending on the profile you choose for your system, which type of trunk module you are using, or what protocol you choose for the module (DTI). Refer to *TrunkMod* on page 507.

Line numbering for upgrades

Module	Cartridge	MICS 1.0 and 1.1 lines	MICS 2.0, 3.0, 4.0, and 5.0 lines	MICS 6.0, 6.1 and 6.1MR lines	MICS 7.0 and newer lines
Mod 08	Cd1-Mod8	49-52	49-56	61-68	
	Cd2-Mod8	53-56	57-64	69-76	
	Cd3-Mod8	57-60	65-72	77-84	
Mod 07	Cd1-Mod7	61-64	73-80	85-92	
	Cd2-Mod7	65-68	81-88	93-100	
	Cd3-Mod7	69-72	89-96	101-108	
Mod 06	Cd1-Mod6	73-76	97-100	109-112	
	Cd2-Mod6	77-80	101-104	113-116	
	Cd3-Mod6	81-84	105-108	117-120	
Mod 05	Cd1-Mod5	85-88	109-112	121-124	
	Cd2-Mod5	89-92	113-116	125-128	
	Cd3-Mod5	93-96	117-120	129-132	

Module	Cartridge	MICS 1.0 and 1.1 lines	MICS 2.0, 3.0, 4.0, and 5.0 lines	MICS 6.0, 6.1 and 6.1MR lines	MICS 7.0 and newer lines
Mod 04	Cd1-Mod4	97-100	121-124	133-136	
	Cd2-Mod4	101-104	125-128	137-140	
	Cd3-Mod4	105-108	129-132	141-144	
Mod 03	Cd1-Mod3	109-112	133-136	145-148	
	Cd2-Mod3	113-116	137-140	149-152	
	Cd3-Mod3	117-120	141-144	153-156	
Target lines			145-272 145-336 (expanded)	157-284 157-348 (expanded)	157-284 157-380 (expanded)

Upgrading ILG functionality with hunt groups

In MICS 4.0, Hunt groups replaced ILG functions from previous versions of MICS. The hunt group broadcast mode contains the equivalent of ILG functionality.

Hunt groups allow the following call programming:

- calls can be queued when all the members in a hunt group are busy
- call forwards are overridden by the hunt group routing, allowing calls to be distributed to other members in the hunt group in a way that does not depend on the busy situation of its members
- the ring / call distribution pattern can be programmed to determine who receives what call and in what order
- an overflow position can be programmed to another hunt group
- sequential and rotary modes are also available to provide versatility to hunt group configurations

New in MICS 6.1: External Hunt group calls can be monitored through telephones that are designated as supervisor telephones (silent monitoring feature).

For more information about hunt groups, see *Hunt groups* on page 420.

Planning Hospitality functions

MICS 4.1 introduced the Hospitality feature, which allows businesses such as hotels to monitor and set room conditions and status, and to program alarms from both an administrative telephone and individual room telephones.

Hospitality features allow the following programming:

- Administrative telephone (password access)
  - monitor and set room condition
  - monitor and set room occupancy
  - monitor and set or cancel alarms
- Room telephone
  - Allow staff to set room condition (password access)
  - Allow guests to set or cancel wakeup alarms

For detailed information about setting up this feature, refer to *Programming Hospitality Services* on page 477.

Installation

Only qualified persons should service the system.

The installation and service of this unit is to be performed only by service personnel having appropriate training and experience. It is critical that installers have the necessary awareness about hazards to which they are exposed in performing a task, and of the measures required to minimize the danger to themselves or other persons.

Electrical shock hazards from the telecommunication network and AC mains are possible with this equipment. To minimize risk to service personnel and users, the ICS must be connected to an outlet with a third-wire ground. In addition, all unused slots should have filler faceplates installed and the doors should be in place at the completion of any servicing.

Service personnel must be alert to the possibility of high leakage currents becoming available on metal system surfaces during power line fault events near network lines. A risk point on the ICS is the power cord earth ground pin. These leakage currents normally safely flow to Protective Earth ground via the power cord. Therefore, it is mandatory that connection to a grounded outlet is performed first and removed last when cabling to the unit. Specifically, operations requiring the unit to be powered down must have the network connections (central office lines) removed first.

Installation checklist

- ☐ test all ISDN network connections, if any
- ☐ mount the Integrated Communications System (ICS)
- ☐ mount the expansion modules (as required)
- ☐ install the Modular ICS NVRAM cartridge
- ☐ install the Expansion Cartridge, Trunk Cartridges (DTI, PRI, or BRI cards, as required)
- ☐ install the optional equipment
- ☐ install power bars, as required
- ☐ mount the distribution panel
- ☐ complete the wiring
- ☐ install the fiber cables
- ☐ install the emergency telephone(s)
- ☐ install the telephones
- ☐ power up the system
- ☐ connect the cables between the distribution block and the expansion modules
- ☐ install the door
- ☐ select the default template using System Startup programming
- ☐ program to customer requirements
- ☐ record programming details in the *Programming Record*
- ☐ ensure that all telephone keys are properly labelled
- ☐ ensure that all telephones are working
- ☐ check that the system is working properly

- ☐ ensure that all relevant documentation is left with the person in charge of the system
- ☐ train the Administrator using the *Getting Started* section in the *Modular ICS 7.0 System Coordinator Guide*
- ☐ for information on upgrading your ICS without adding digital T1, see *Trunk and Station Modules* on page 217.

To avoid electrical shock hazard to personnel or equipment damage, observe the following precautions when installing telephone equipment.

- Always disconnect telecommunication network connectors before disconnecting the AC power plug.
- Never connect the central office connectors until you have connected the power plug.
- Never install telephone wiring during a lightning storm.
- Never install telephone jacks in wet locations unless the jack is specifically designed for wet locations.
- Never touch non-insulated telephone wires or terminals unless the telephone line has been disconnected at the network interface.
- Use caution when modifying or installing telephone lines.

Testing the ISDN BRI network connection

Before you install a Norstar system which uses BRI cards you should test your connection to the ISDN network.

If you are installing a system which connects to the network using BRI-ST cards, the network connection must be equipped with an NT1. See the ISDN chapter and the wiring information in this chapter for more information about installing an NT1.

To test the ISDN BRI connection:

1. Connect ISDN terminal equipment (TE) that conforms to Bellcore standard to your central office ISDN jack or NT1. U interface TE can connect directly to the central office jack. S interface TE connect to the central office through an NT1.
2. Program the TE with the appropriate switch type, service profile identifier (SPID), and Network directory number (DN) using the instructions that come with the TE.
3. Check for dial tone, then place a call and verify the quality and clarity of the connection. If there is a problem, contact your service provider.
4. Repeat steps one through three for each network connection.

Installing the cartridges

The following table shows you which cartridges can be installed in which ICS and TM slots.

Cartridge type	ICS Slot	TM Slot
Modular ICS NVRAM cartridge	Feature Cartridge Slot	
Modular ICS ROM software cartridges: USA-MICS-XC 7.0 CDA-MICS-XC 7.0 NA-MICS 7.0	NVRAM Cartridge Slot	
Services Cartridge	1	
Fiber Expansion Cartridge (2-port)	2	
Fiber Expansion Cartridge (6-port)	1 or 2 (see note below)	
Combination Fiber 6-port Services Cartridge	1 or 2 (see note below)	
Digital Trunk Interface (DTI) card configured for TI card or PRI	3 or 4	1
Starting in MICS 6.0: Global Analog LS/DS trunk cartridge replaces: Loop Start Disconnect Supervision (LS/DS) Trunk Cartridge	3 or 4	1, 2 or 3
Starting in MICS 6.0: Global Analog CLI trunk cartridge replaces: Caller Identification (CI) Trunk Cartridge	3 or 4	1, 2 or 3
E&M Trunk Cartridge		1, 2 or 3
DID Trunk Cartridge		1, 2 or 3
Copper Expansion (2-port)	1	
Copper Expansion (6-port)	1	
BRI-ST card	3 or 4	1, 2 or 3
BRI-U2 card	3 or 4	1, 2 or 3
BRI-U4 card	3 or 4	1, 2 or 3

Note: Use Slot 1 only when installing cartridges for 14-port, fully expanded (mega) systems. In this case, both slots 1 and 2 are installed with 6-port Expansion or a Combination Fiber 6-port Services Cartridge. If you use both slot 1 and 2, the software must be MICS-XC.

- LS/DS Global Analog Trunk Cartridges and CI Global Analog Trunk Cartridges both support loop start external lines.
- The Digital trunk Interface (DTI) supports both digital T1 and PRI lines. The DTI card can be configured to support ISDN PRI. Systems running Profile 1 or 4 can support 1 off-core DTI module.
- The Loop Start Trunk Cartridge supports loop start external lines.
- The E&M Trunk Cartridge supports E&M lines and provides direct inward system access (DISA).
- The DID Trunk Cartridge supports direct inward dialing lines.
- The BRI-ST card supports ISDN BRI S or T reference point loops.
- The BRI-U2 and BRI-U4 cards support two or four ISDN BRI U reference point loops, respectively.
- The Analog Extension Module (AEM), also known as an Analog Station Module (ASM), connects up to eight standard analog devices through eight ports connected to the CCU through a fibre cable link.

Mounting the modules

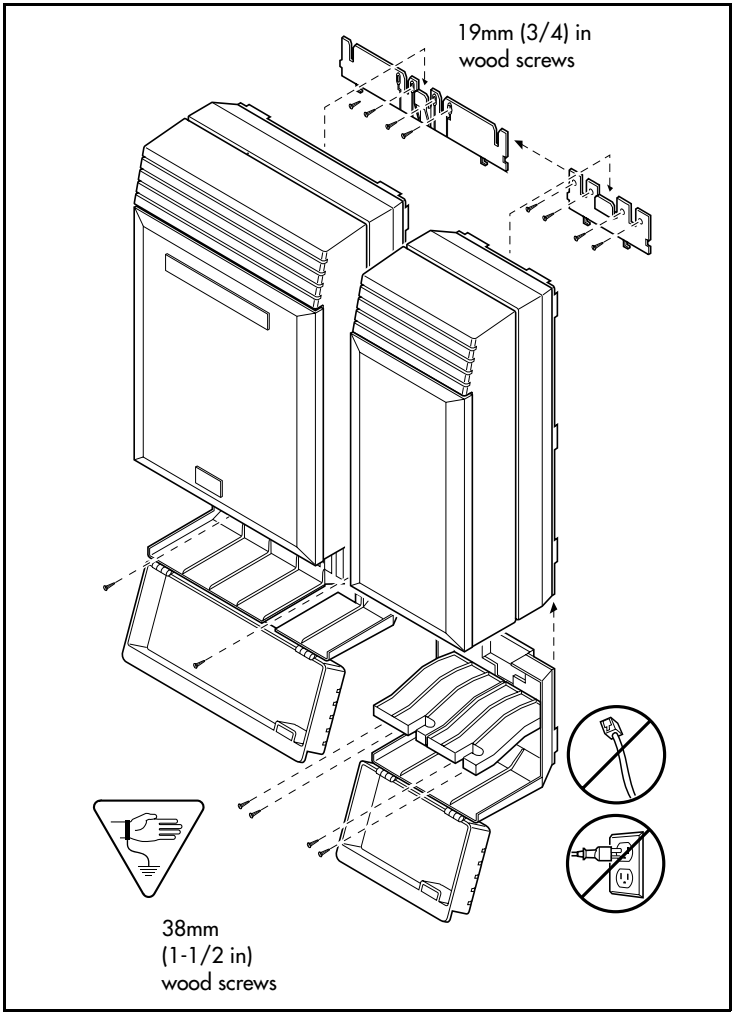

Attach bracket to secure surface.

Do not screw bracket directly to drywall. Use the two inner screw holes on the bracket.

1. Secure a 19 mm wood backboard to a wall. It must be capable of supporting a 20 kg mass.
2. Position the module mounting bracket on the backboard, smooth side against the backboard, with the screw holes at the top. Ensure that the bracket is level.
3. Fasten the bracket to the backboard with two 3/4-inch No. 10 round head wood screws through the inner pair of holes. The other two holes are optional.
4. Slide the module down onto the center bracket flange. Line up the notches on the far side of the bracket to the flanges on the module.
5. Open the front cable trough door. Fasten the bottom of the module to the backboard.
   Use two 3/4-inch No. 10 round head wood screws through the screw holes on each side of the cable trough.

   See *T1 or ISDN-PRI configurations* on page 523 for configurations of Trunk Cartridges on the ICS slots.

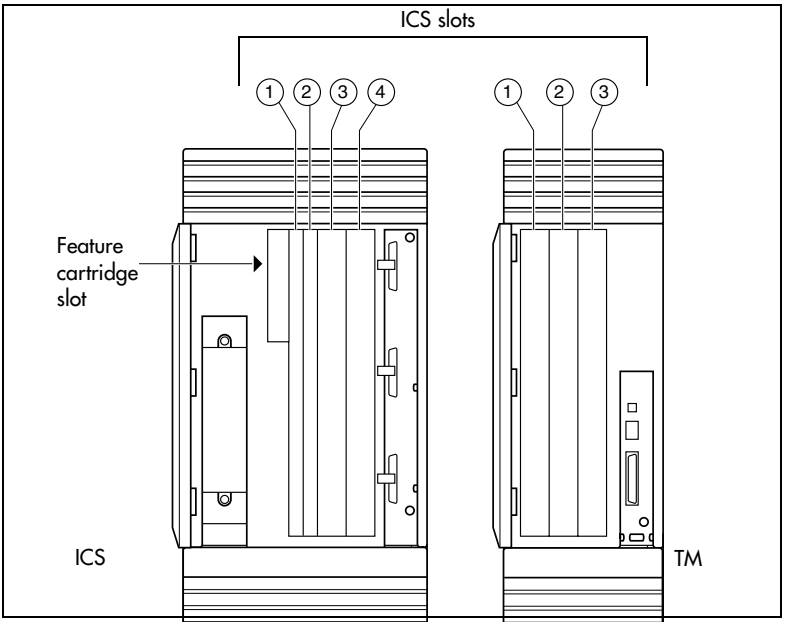

Avoid risk of electrical shock.

Voltages of up to 130 V may be present on the 1.544 Mbps circuit and on portions of the DTI circuitry.

Installation tips

- For a two-port (midi) system, a two-port fiber Expansion Cartridge is installed only in ICS slot 2.
- For a six-port (maxi) system, a six-port fiber Expansion Cartridge or a Combination Fiber six-port Services Cartridge is installed only in ICS slot 2.
- When a six-port fiber Expansion Cartridge is installed in ICS slot 2, either an additional six-port fiber Expansion Cartridge, for a fully analog trunk system, or a Combination Fiber 6-port Services Cartridge, can be installed in ICS slot 1 for a 14-port (mega) system with digital or BRI lines.
- Two Combination Fiber 6-port Services Cartridge are supported on a mega configuration using both ICS slots 1 and 2. When expanding beyond 6 ports, it is recommended two Combination Fiber 6-port Services Cartridge be used if two DTI cards are installed.
- For a 14-port (mega) system, any combination of the 6-port fiber Expansion and the Combination Fiber 6-port Services Cartridge is supported using both ICS slots 1 and 2.
- A copper Expansion Cartridge is a full-width cartridge and covers both ICS slots 1 and 2.
- One 6-port copper Expansion Cartridge is supported for a maxi configuration and can only be installed in slot 1.

- One two-port copper Expansion Cartridge is supported for a midi configuration and can only be installed in slot 1.
- Depending on your system configuration, BRI-ST, BRI-U2, BRI-U4, the off-core DTI cards can only reside in certain trunk modules. In a midi system, the cards must be in trunk modules 3 or 4, for a maxi or mega system, the cards must be in trunk modules 7 or 8. The cards can reside in the ICS regardless of system size.

Alarm Telephone will indicate a warm or cold reset.

An alarm and a prompt indicating warm or cold reset will occur on the alarm telephone if an expansion cartridge is installed in the wrong ICS slot or when the system size has been decreased.

Installing the ROM Software Cartridge

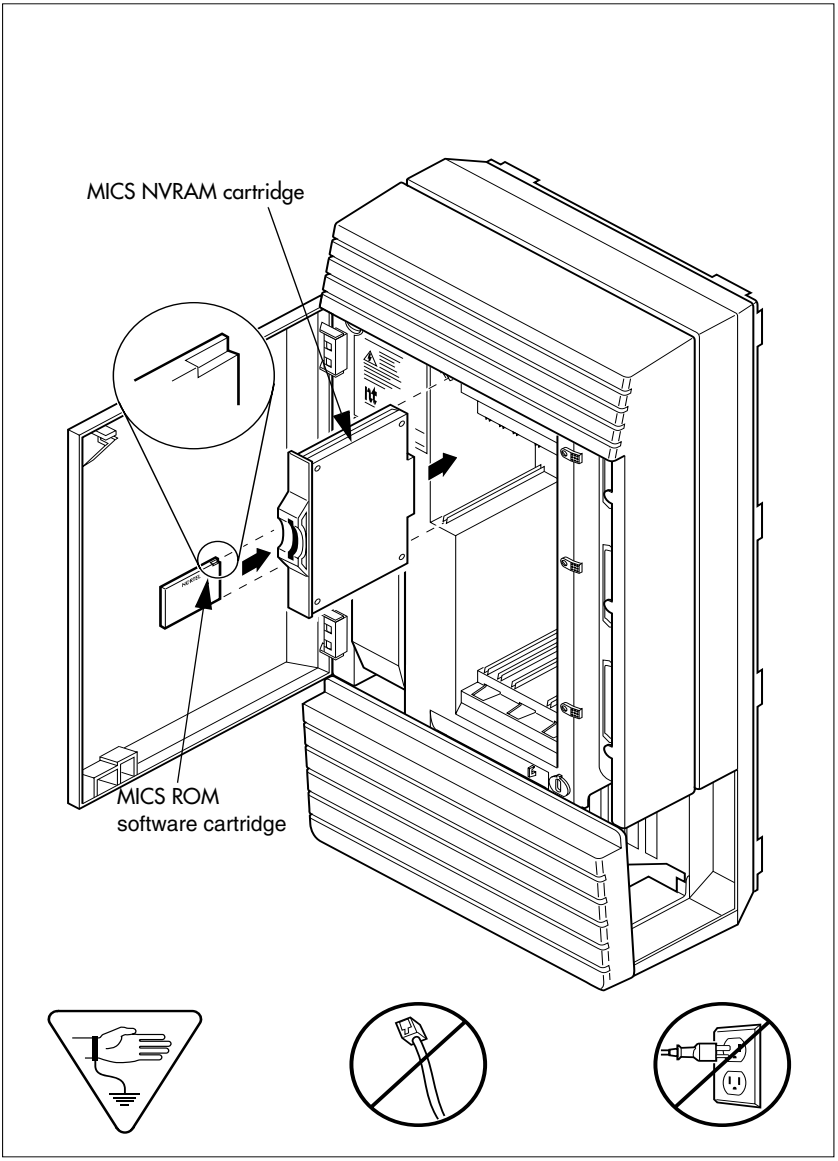

MICS ROM software cartridge

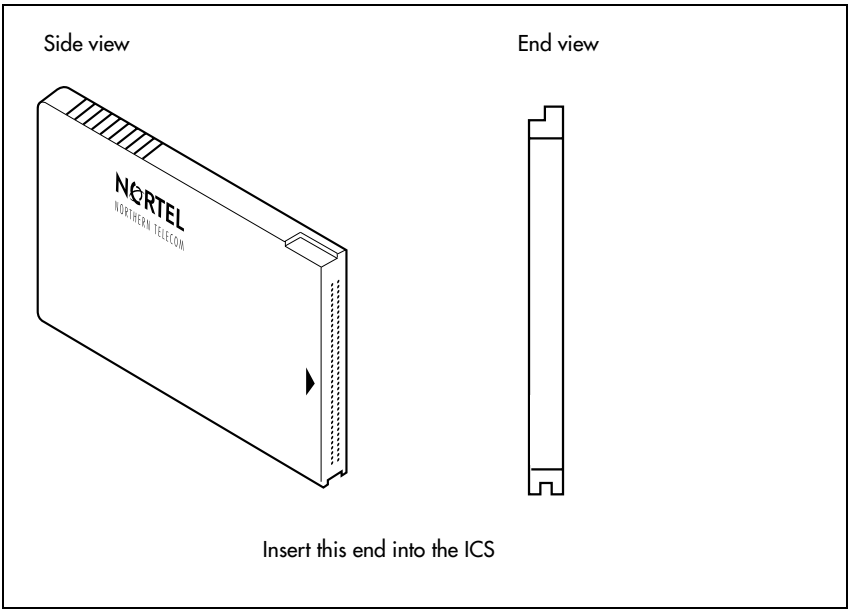

Inserting a cartridge

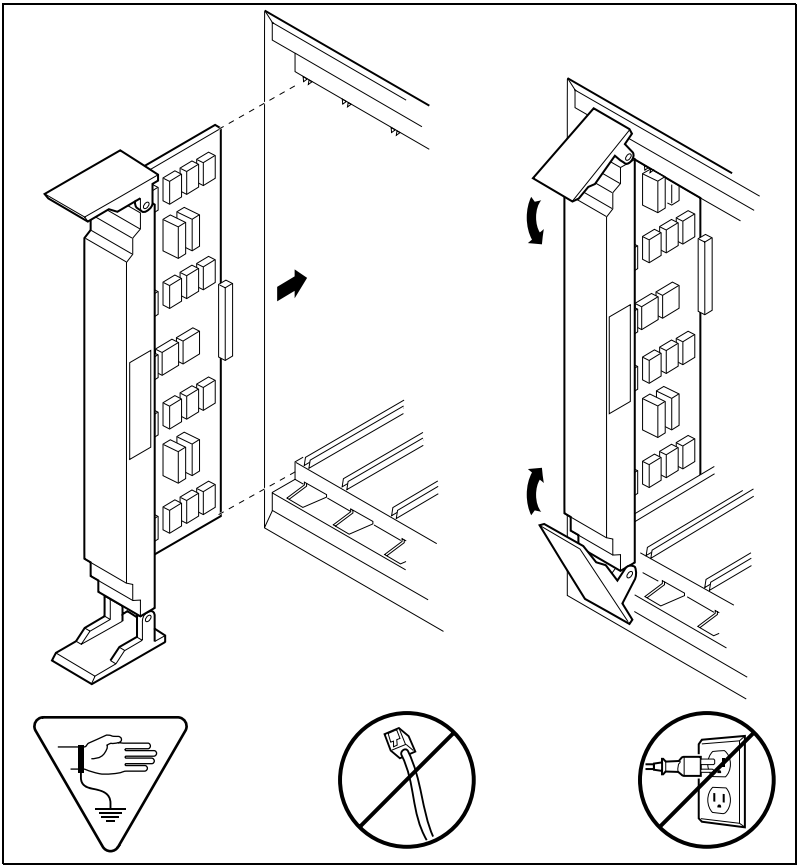

Close clips simultaneously.

It is important to center and close the two clips on the cartridge simultaneously, otherwise the cartridge may become misaligned in its slot or with its connector. If improperly inserted, the connector will be damaged.

PCB is electrostatic-sensitive.

Do not touch the printed circuit board on a cartridge. This is an electrostatic-sensitive device.

1. Install trunk cartridges in the ICS beginning with Slot 4 then Slot 3.
2. Install trunk cartridges in the trunk modules beginning with Slot 1 then Slot 2 and then Slot 3.

For easier wiring, install similar type Trunk Cartridges together in the same Trunk Module.

If you install an E&M or a DID or BRI Trunk Cartridge in the left-most slot (slot 1) of a TM, emergency telephones cannot be supported for that Trunk Module.

Terminating resistors on BRI-ST Cards

The standard ISDN user-network interface wiring requires terminating resistors at each end of the loop for point-to-point operation. This ensures correct timing of the signaling circuits.

Loop termination can be provided at either the point where the ISDN terminal is attached, or by the device attached to the loop which has built-in termination. Because the Modular ICS is usually at one end of the loop, the BRI-ST card is shipped with termination built-in for each ISDN loop. It is ready to be used where the ICS is located at one end of the loop, as in the following illustration:

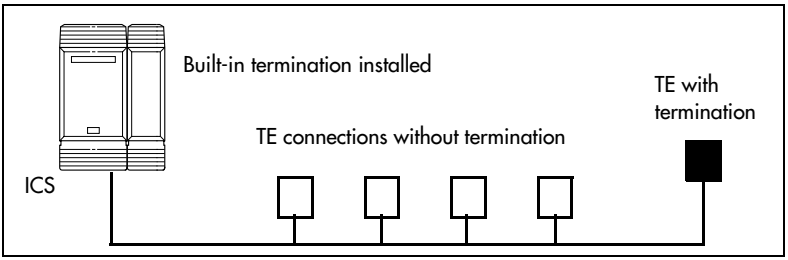

Shorting straps on a BRI-ST card

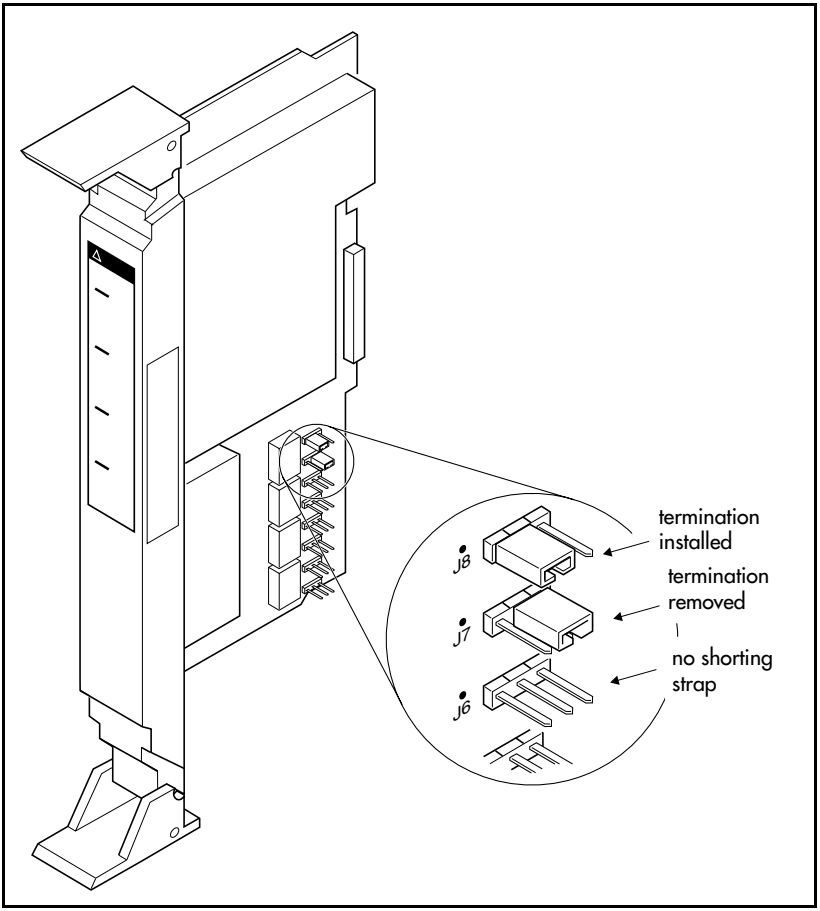

Ensure that the shorting straps are installed on both the receive and transmit jumpers for the loop. Refer to the illustration above.

The jumpers are numbered top to bottom, but the loops associated with each pair of jumpers does not follow the same top-to-bottom sequence. Refer to the table on the next page.

Receive and transmit jumper loop connections

Loop	RX and TX shorting straps
1	J3 and J4
2	J7 and J8
3	J1 and J2
4	J5 and J6

Connecting expansion modules

If your system includes fiber Trunk Modules, fiber Station Modules, Data Modules or Analog Station Modules, you need to connect the modules to the Expansion Cartridge by means of fiber cables.

Order of connection

In order to keep the default port and telephone numbering:

- Connect Trunk Modules to the Expansion Cartridge beginning at the top and working down.
- Connect Station Modules to the Expansion Cartridge beginning at the bottom and working up.

Analog Station Module

If you are installing the ICS system with an ASM, refer to the diagram below.

Connect jack 1 on the ASM to the first available fibre cable link on the CCU.

ASM cable connections

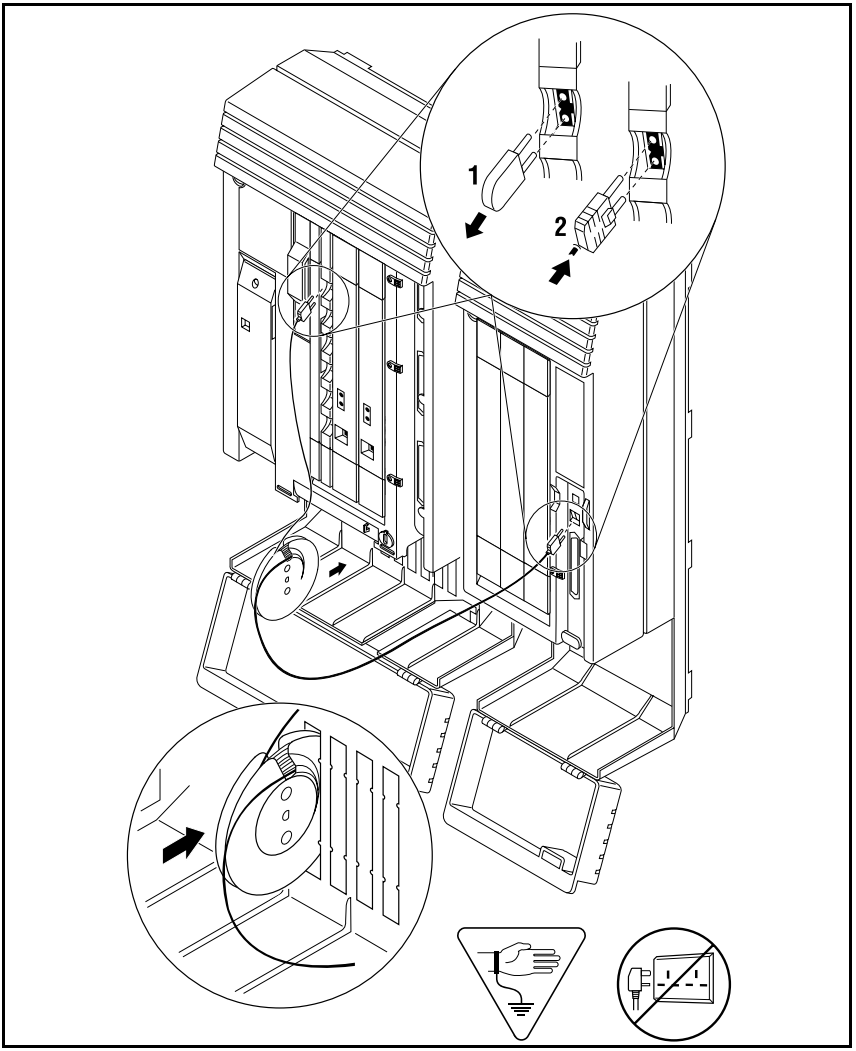

The cable trough can accommodate two fibre cable spools. Either slot may be used.

The ASM has three connectors, two fibre cable links and a 25-pair pin connector. Refer to the wiring section for the pinout for the 25-pair pin connector.

Connecting more than one ASM

You can connect additional ASMs.

1. Connect jack 1 on the second ASM to jack 2 on the first ASM.
2. Connect jack 1 on the third ASM to the next available fibre cable link on the ICS.
3. The fourth module is connected to the third, and so on.
4. Each fibre cable link can support two ASMs.

Connecting multiple modules

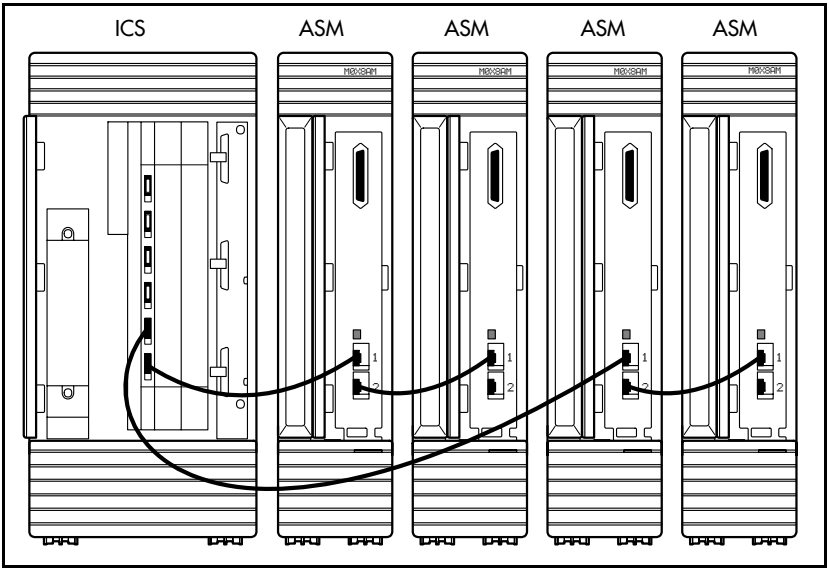

After the modules are mounted and connected, feed the cables through the cable trough.

Tips - *On a midi system, ports 3 and 4 can be used for Trunk Modules or Station Modules. In this case, connect Trunk Modules beginning at the top (port 4). Connect Station Modules beginning at the bottom (port 3).*

On a maxi system, ports 3 through 8 can be used for Trunk Modules or Station Modules. In this case, Trunk Modules should be connected beginning at the top (port 8) and working down. Station Modules should be connected beginning at the bottom (port 3) and working up.

On a fully expanded 14-port (mega) system, connect Trunk Modules beginning at the top (port 8) and working down. Station Modules would be connected beginning at the bottom (port 3) and working up. Trunk Modules cannot be connected to the Expansion Cartridge connected in slot 1.

When no more Station Modules can be added to the Expansion Cartridge in slot 2, connect additional Station Modules to the Expansion Cartridge in slot 1, beginning at the bottom (port 9) and working up.

Two-port Expansion Cartridge

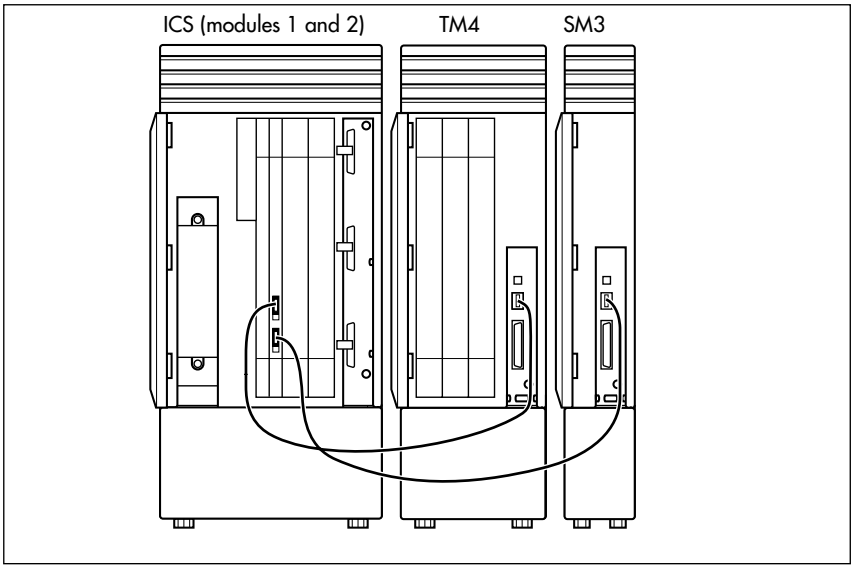

Six-port Expansion Cartridge

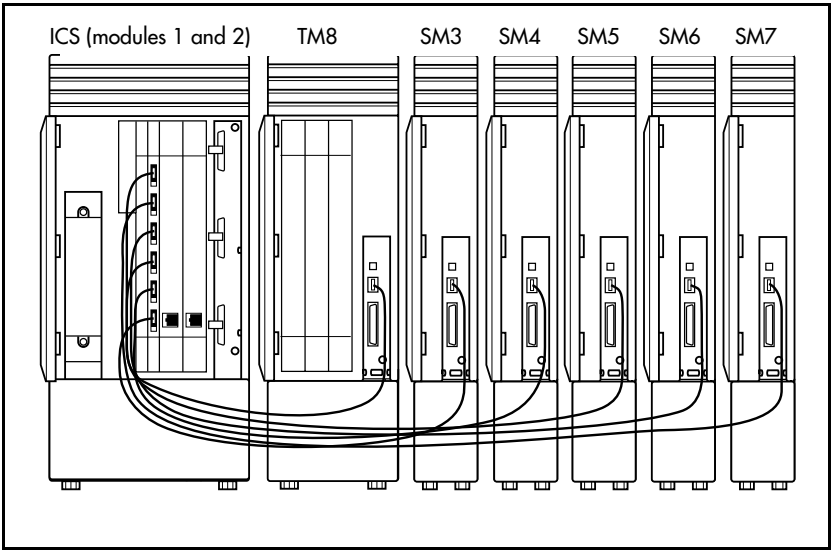

Twelve-port Expansion Cartridge

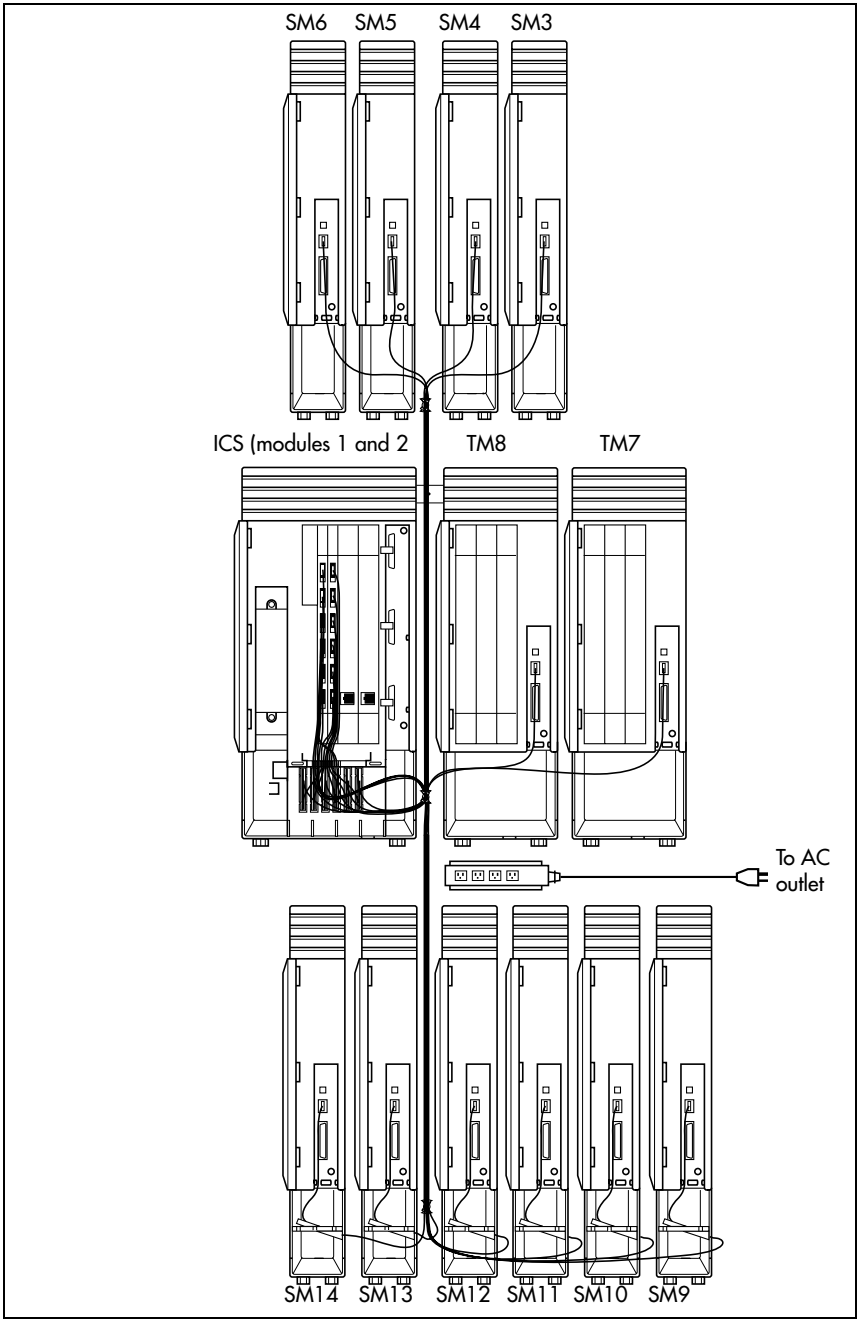

Installing fiber cables

Installing fiber cables.

Fiber cables are durable, but can be damaged. Damaged cables can affect the transmitted signals.

To avoid damaging the cables, observe the following:

- Coil excess fiber cable on the spool provided for the installation.
- Secure the fiber cable spool in the ICS cable trough.
- Ensure that bends in the cable are no tighter than 100 mm. (4 in.) in diameter.
- When using cable ties, bundle fiber cables loosely.
- Avoid excessive pulling, compression or impact.
- Do not grasp the fiber cable, or the clasp where the cable joins the plug, when connecting or disconnecting a fiber cable plug into a port.
- Do not leave fiber cables in an environment with excessively high temperatures (for example, on top of radiators).

Fiber cable management system

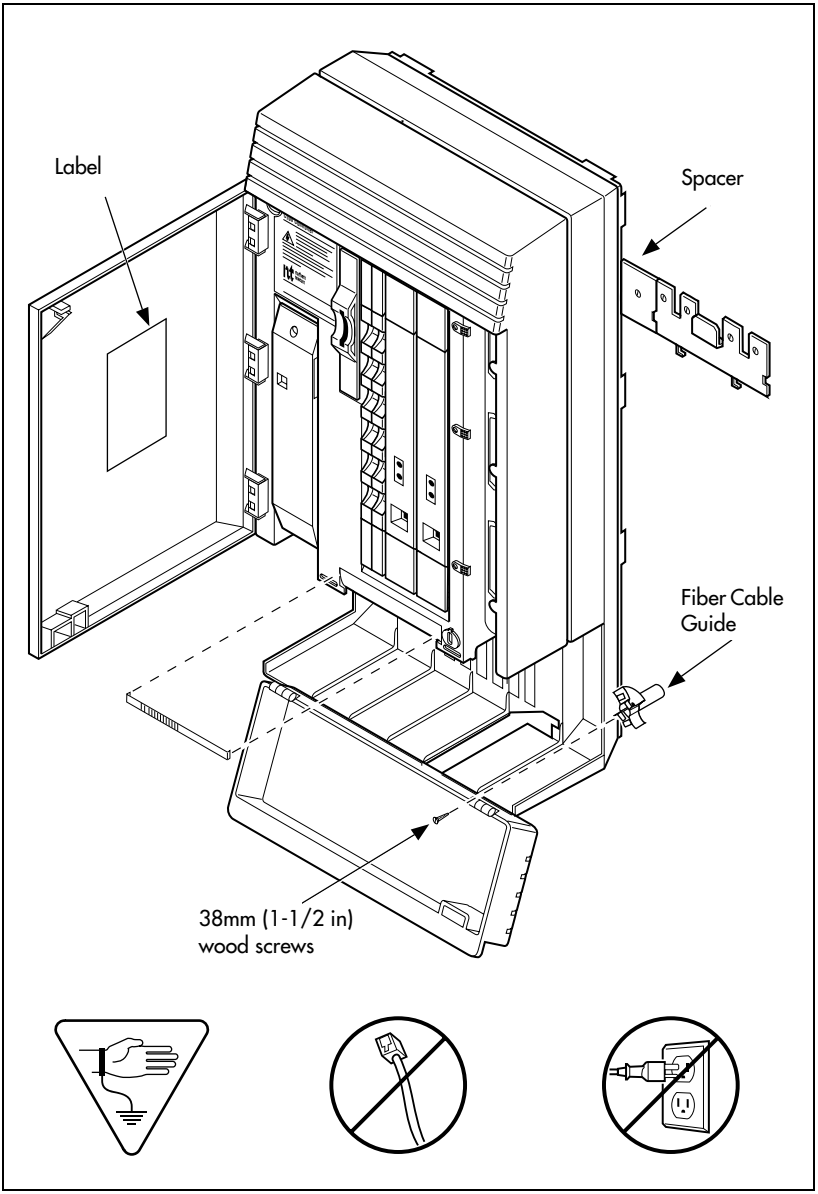

Using the fiber cable management system

To facilitate the installation of systems using fiber cables, the Fiber Cable Management System ensures that power cords are located outside of the cable tray. It also ensures that a 2.6 cm (1 in.) space exists between the ICS module and other modules.

The following hardware components are used in the Fiber Cable Management System:

- **Fiber Comb (one per system):** The Fiber Comb, is installed, using an adhesive back, on the ICS, below the fiber expansion cartridges. The Fiber Comb keeps the fiber cable in place and prevents the cables from being pinched between doors. Use the comb to keep fiber cables organized as they are routed to each Station Module, as shown in the 12-port example below.

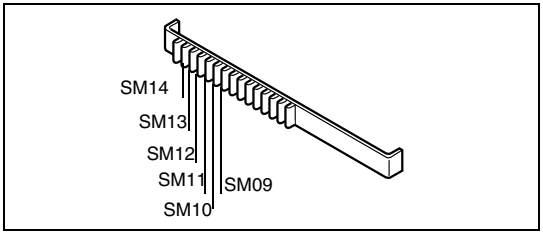

- **Fiber Cable Guide (three per system):** install in the entrance and exit of the cable trough. The Fiber Cable Guide allows fibers to be correctly routed to maintain a minimum bend radius when going through the cable trough.

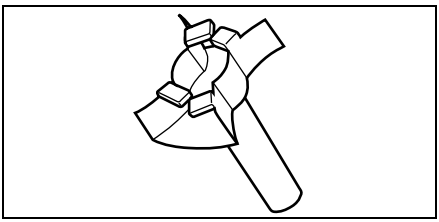

- **Spacer (three per system):** install between the mounting brackets of the ICS and an adjacent module. The Spacer provides a 2.6 cm (1 in.) space between modules and the ICS.

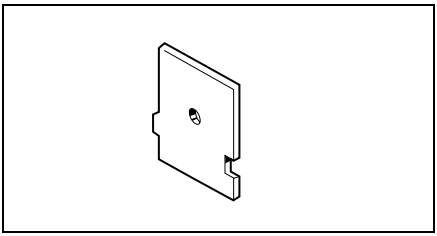

- **Fiber Spool Holder (six per system):** Replaces the trough shelf in modules requiring additional fiber spools. Install the spool holder in the right side of a Trunk Module.

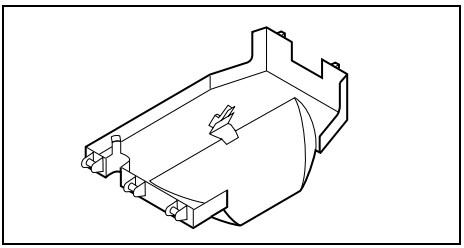

- **ICS Door Label:** Located on the inside of the ICS door, it provides space to identify fiber port allocation on the ICS.

Using the fiber spool

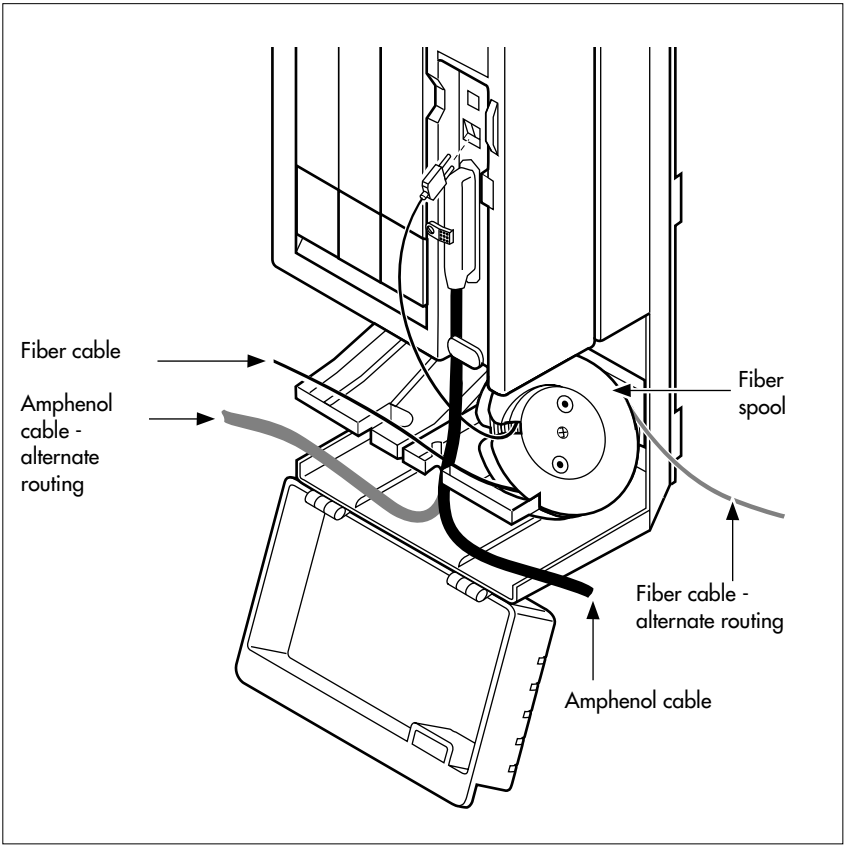

Making fiber connections

MICS-XC system

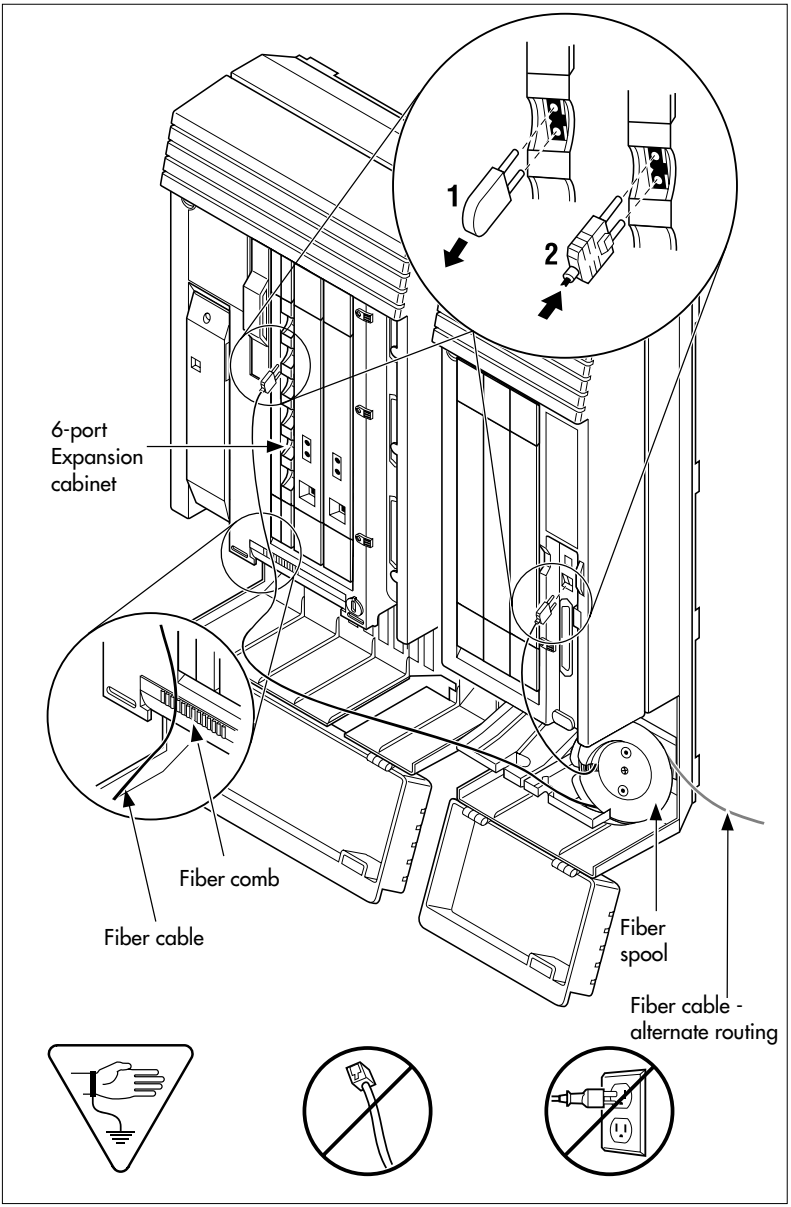

Routing fiber cables

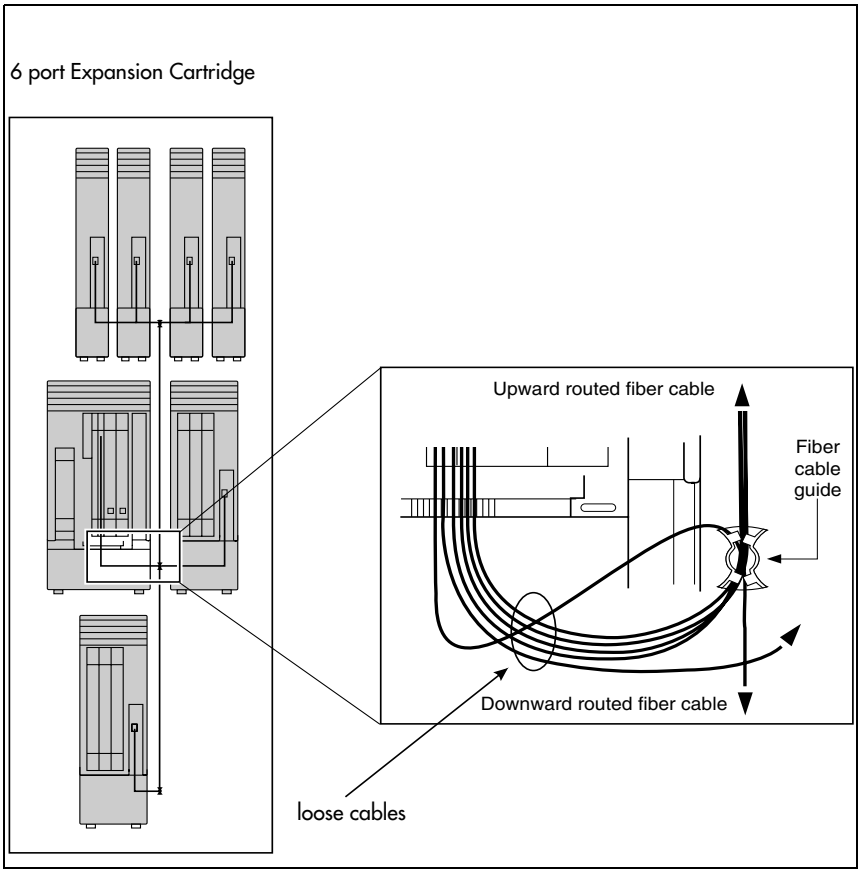

Connecting the wiring

This section describes the wire connections for your MICS system.

Connecting the wiring to the distribution panel

1. Route the cables through the hole in the ICS cable trough to the distribution panel.
2. Bundle the cables with cable ties and secure them to the wall to support their weight.
3. Connect the telephone and auxiliary equipment wires to the appropriate pins on the distribution block (refer to the wiring charts).
   Note: If you are installing M7324+CAP module central answering positions (CAPs), install the four-wire cable that comes with the SAP for each instance this is required.
4. Cross-connect the ICS telephone and auxiliary equipment wiring.
5. Connect the Station Module telephone wiring to the corresponding station pins.
6. Using a single pair of wires for each telephone, connect each of the telephones according to the wiring charts.
   Note: If you are installing M7324+CAP module CAPs, the SAPS connects to the second pair of wires in the four-wire pair provisioned for each CAP that requires SAPS support.
7. Cross-connect the external lines to the distribution block — loop start, E&M, DID, BRI. Refer to the wiring charts.
8. The DTI is equipped with an internal channel service unit (CSU). You can connect the DTI directly to the termination point provided by your T1 or PRI service

provider. If you disable the internal CSU, you can connect the DTI to an external CSU or multiplexer.

The DTI does not provide the DC connection required for through-fed repeaters. If through-fed repeaters are used on the T1 or PRI span, disable the internal CSU and connect the DTI to an external CSU.

Connecting an ICS with loop start lines

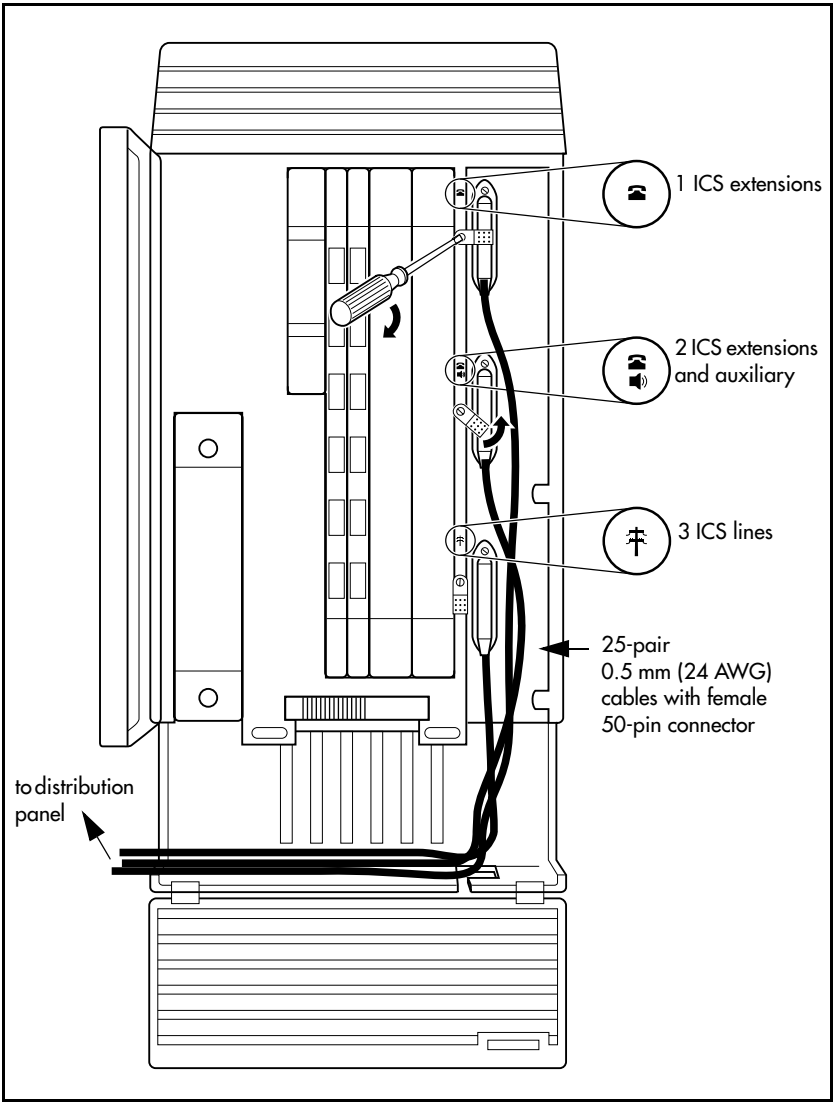

Do not attach central office connections to the ICS or Modules until power is connected to the units.

Connecting the wiring for an ICS with T1 or PRI lines MICS-XC system

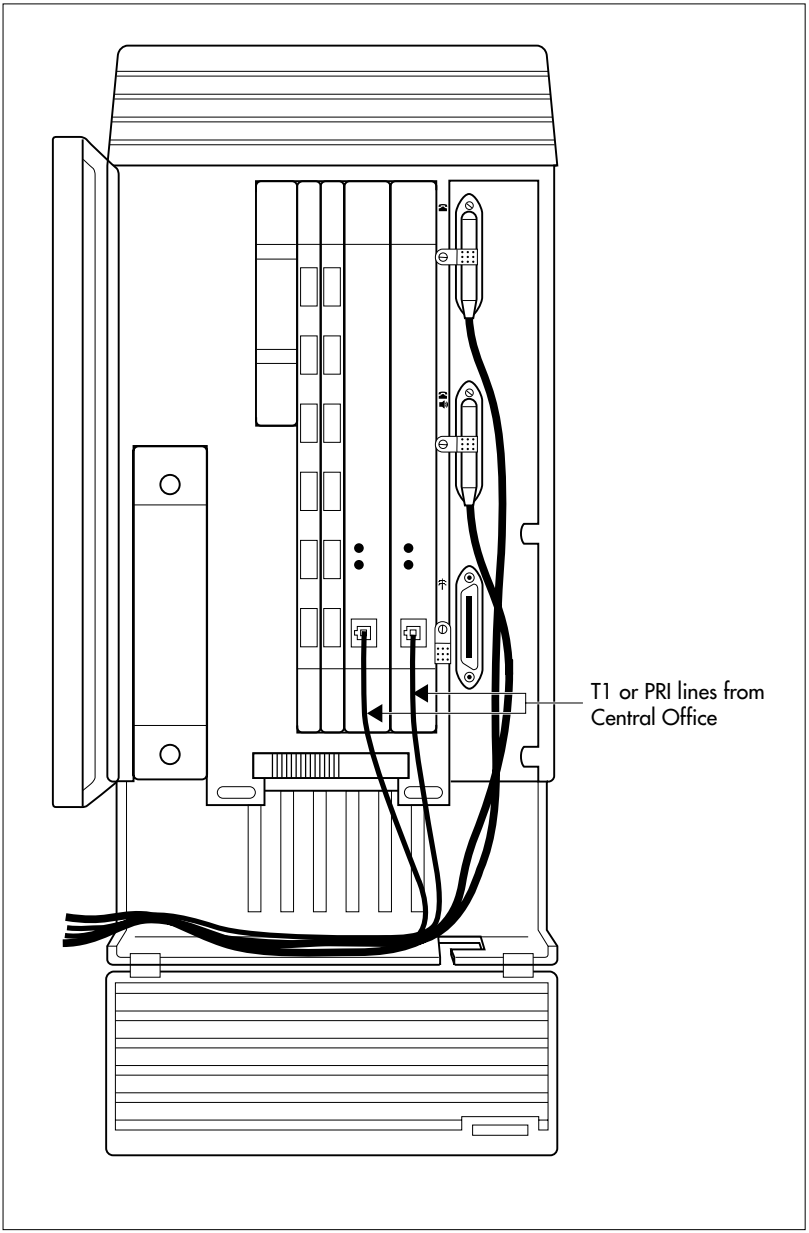

Connecting a module

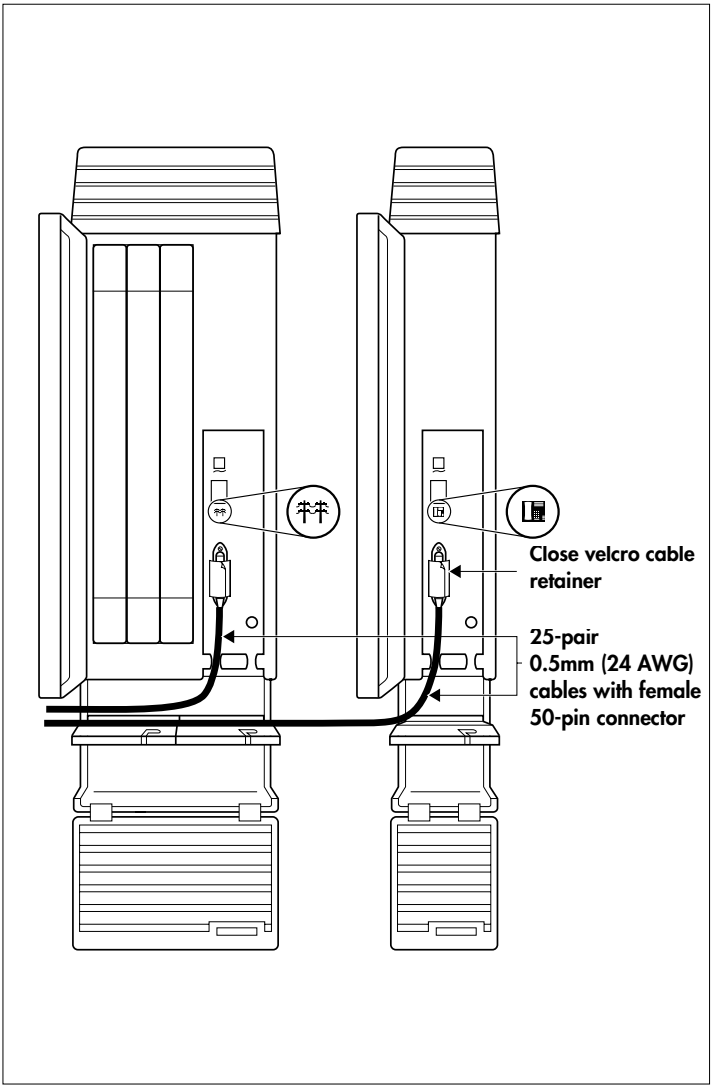

Wiring charts

Port numbering on the wiring charts

The port number listed on the wiring charts is useful in tracking down faults during a maintenance session where error codes appear on the alarm telephone display. Refer to *Alarm codes* on page 548.

The port numbers (for example: XX12) on the Trunk Cartridge and Station Module wiring charts have two components:

- XX corresponds to the number that appears on the face of the Expansion Cartridge port that the Trunk Module or Station Module is connected to.
- digits (for example, 01 or 12) identify an individual port number associated with that module.

For example:
The code 812 appearing as part of an error message for a Trunk Module indicates that the problem is with Expansion Cartridge port #8 and internal port 12. The corresponding Trunk Module pins on the distribution block are pin 47 (violet-orange) and pin 22 (orange-violet).

Integrated Communications System (ICS)

In the charts on the following pages, notice that the ICS has two internal modules, ICS #1 and ICS #2. ICS #1 handles telephones and auxiliary equipment. ICS #2 handles lines.

B1 and B2 directory numbers

The terms B1 and B2 correspond to channels on Norstar for transmitting voice and data. Each DN port number has a B1 DN and a B2 DN. Devices such as the Norstar and Business Series telephones use only the B1 DN. Other devices may need both B1 and B2 channels, requiring B1 and B2 DNs.

Non-expanded system (ICS alone) numbering

Module	Lines	Line ports	B1 DN	B2 DN	DN ports
ICS (#2)	001-060	201-260	— —	— —	— —
ICS (#1)	— —	— —	21-52	53-84	101-132

Two-port Expansion Cartridge and ICS numbering

Module	Lines	Line ports	B1 DN	B2 DN	DN ports
Mod 04	061-084	401-424	269-284	333-348	401-416
Mod 03	085-108	301-324	253-268	317-332	301-316
ICS (#2)	001-060	201-260	— —	— —	— —
ICS (#1)	— —	— —	221-252	285-316	101-132

Six-port Expansion Cartridge and ICS numbering

Module	Lines	Line ports	B1 DN	B2 DN	DN ports
Mod 08	061-084	801-812	333-348	461-476	801-816
Mod 07	085-108	701-712	317-332	445-460	701-716
Mod 06	109-120	601-612	301-316	429-444	601-616
Mod 05	121-132	501-512	285-300	413-428	501-516
Mod 04	133-144	401-412	269-284	397-412	401-416
Mod 03	145-156	301-312	253-268	381-396	301-316
ICS (#2)	001-060	201-260	— —	— —	— —
ICS (#1)	— —	— —	221-252	349-380	101-132

14-port expansion system (mega) and ICS numbering

Module	Lines	Line ports	B1 DN	B2 DN	DN ports
Mod 14	— —	— —	*621-636 **429-444	*753-768 **621-636	1401-1416
Mod 13	— —	— —	*605-620 **413-428	*737-752 **605-620	1301-1316
Mod 12	— —	— —	397-412	589-604	1201-1216
Mod 11	— —	— —	381-396	573-588	1101-1116
Mod 10	— —	— —	365-380	557-572	1001-1016
Mod 09	— —	— —	349-364	541-556	901-916
Mod 08	061-084	801-812	333-348	525-540	801-816
Mod 07	085-108	701-712	317-332	509-524	701-716
Mod 06	109-120	601-612	301-316	493-508	601-616
Mod 05	121-132	501-512	285-300	477-492	501-516
Mod 04	133-144	401-412	269-284	461-476	401-416
Mod 03	145-156	301-312	253-268	445-460	301-316
ICS (#2)	001-060	201-260	— —	— —	— —
ICS (#1)	— —	— —	221-252	413-444	101-132

*** Systems upgraded from software previous to MICS 7.0**
**** New MICS 7.0 systems**

Tips - *Depending on your system configuration, BRI-ST, BRI-U2, and BRI-U4 cards can only reside in certain trunk modules.*
On a Midi system, the cards must be in trunk modules 03 or 04. On a Maxi or Mega system, the cards must be in trunk modules 07 or 08. The cards can reside in the ICS regardless of system size.

The Mega system can support up to 10 station modules on the 12-port expansion module. Note that the port numbers on modules 13 and 14 also start with 12, even though they are on separate ports.

(continued)

Port 3 is the bottom fiber cable port on both the two-port and the six-port Expansion Cartridge in slot 2. Port 9 is the bottom fiber cable port located on the left most expansion card in slot 1.

B1 and B2 directory numbers reflect the default numbering scheme.

If you expand your system after initial installation and programming, there may appear to be gaps in your B1 DN numbering. This is because the system has already assigned DN numbers to B2 channels. You can correct these gaps by performing Startup programming and resetting the system memory, or by changing the individual DNs. See Change DNs *under* System prgrming.

Startup programming erases the system memory.

ICS telephone wiring chart

Pin	Wire color	Port	Service	Devices (ICS)	Default DN
26	White-Blue	101	T	1	
1	Blue-White	101	R	1	21/221/2221
27	White-Orange	102	T	2	
2	Orange-White	102	R	2	22/222/2222
28	White-Green	103	T	3	
3	Green-White	103	R	3	23/223/2223
29	White-Brown	104	T	4	
4	Brown-White	104	R	4	24/224/2224
30	White-Slate	105	T	5	
5	Slate-White	105	R	5	25/225/2225
31	Red-Blue	106	T	6	
6	Blue-Red	106	R	6	26/226/2226
32	Red-Orange	107	T	7	
7	Orange-Red	107	R	7	27/227/2227
33	Red-Green	108	T	8	
8	Green-Red	108	R	8	28/228/2228
34	Red-Brown	109	T	9	
9	Brown-Red	109	R	9	29/229/2229
35	Red-Slate	110	T	10	
10	Slate-Red	110	R	10	30/230/2230
36	Black-Blue	111	T	11	
11	Blue-Black	111	R	11	31/231/2231
37	Black-Orange	112	T	12	
12	Orange-Black	112	R	12	32/232/2232
38	Black-Green	113	T	13	
13	Green-Black	113	R	13	33/233/2233
39	Black-Brown	114	T	14	
14	Brown-Black	114	R	14	34/234/2234
40	Black-Slate	115	T	15	
15	Slate-Black	115	R	15	35/235/2235
41	Yellow-Blue	116	T	16	
16	Blue-Yellow	116	R	16	36/236/2236
42	Yellow-Orange	117	T	17	
17	Orange-Yellow	117	R	17	37/237/2237
43	Yellow-Green	118	T	18	
18	Green-Yellow	118	R	18	38/238/2238
44	Yellow-Brown	119	T	19	
19	Brown-Yellow	119	R	19	39/239/2239
45	Yellow-Slate	120	T	20	
20	Slate-Yellow	120	R	20	40/240/2240
46	Violet-Blue	121	T	21	
21	Blue-Violet	121	R	21	41/241/2241
47	Violet-Orange	122	T	22	

Pin	Wire color	Port	Service	Devices (ICS)	Default DN
22	Orange-Violet	122	R	22	42/242/2242
48	Violet-Green	123	T	23	
23	Green-Violet	123	R	23	43/243/2243
49	Violet-Brown	124	T	24	
24	Brown-Violet	124	R	24	44/244/2244
50	Violet-Slate	----	----	no connection	----
25	Slate-Violet	----	----	no connection	----

T and R represent station connections and should not be confused with Tip and Ring on external lines. Station connections are non-polarized.
Note: Central Answering Positions (CAPs) that require a station auxiliary power supply (SAPS) must be connected with a four-wire cord, as the SAPS is connected to the second wire pair. This includes any 7324 digital phone and CAP module combination, and any 7316E digital phone attached to more than 4 KIMs. Refer to the SAPS installation card for detailed installation instructions.

ICS telephone and auxiliary equipment wiring chart

Pin	Wire color	Port	Service	Telephones (ICS)	Default DN
26	White-Blue	125	T	25	
1	Blue-White	125	R	25	45/245/2245
27	White-Orange	126	T	26	
2	Orange-White	126	R	26	46/246/2246
28	White-Green	127	T	27	
3	Green-White	127	R	27	47/247/2247
29	White-Brown	128	T	28	
4	Brown-White	128	R	28	48/248/2248
30	White-Slate	129	T	29	
5	Slate-White	129	R	29	49/249/2249
31	Red-Blue	130	T	30	
6	Blue-Red	130	R	30	50/250/2250
32	Red-Orange	131	T	31	
7	Orange-Red	131	R	31	51/251/2251
33	Red-Green	132	T	32	
8	Green-Red	132	R	32	52/252/2252
34	Red-Brown	----	----	no connection	
9	Brown-Red	----	----	no connection	
35	Red-Slate	----	----	no connection	
10	Slate-Red	----	----	no connection	
36	Black-Blue	----	----	no connection	
11	Blue-Black	----	----	no connection	
37	Black-Orange	----	----	no connection	
12	Orange-Black	----	----	no connection	
38	Black-Green	----	----	no connection	
13	Green-Black	----	----	no connection	
39	Black-Brown	----	----	no connection	

Pin	Wire color	Port	Service	Telephones (ICS)	Default DN
14	Brown-Black	----	----	no connection	
40	Black-Slate	----	T	Page	
15	Slate-Black	----	R	Page	
41	Yellow-Blue	----	Make	External page	
16	Blue-Yellow	----	Common	External page	
42	Yellow-Orange	----	T	Music	
17	Orange-Yellow	----	R	Music	
43	Yellow-Green	----	----	reserved	
18	Green-Yellow	----	----	reserved	
44	Yellow-Brown	----	Make	Auxiliary ringer - 1	
19	Brown-Yellow	----	Common	Auxiliary ringer - 1	
45	Yellow-Slate	----	----	reserved	
20	Slate-Yellow	----	----	reserved	
46	Violet-Blue	----	----	no connection	
21	Blue-Violet	----	----	no connection	
47	Violet-Orange	----	----	reserved	
22	Orange-Violet	----	----	reserved	
48	Violet-Green	----	----	reserved	
23	Green-Violet	----	----	reserved	
49	Violet-Brown	----	----	reserved	
24	Brown-Violet	----	----	reserved	
50	Violet-Slate	----	----	reserved	
25	Slate-Violet	----	----	reserved	

T and R represent station connections and should not be confused with Tip and Ring on external lines. Station connections are non-polarized.

ICS external loop start lines wiring (profile 1, 3, or 4)

Pin	Wire color	Port	Service	Line
26	White-Blue	201	T	1
1	Blue-White	201	R	1
27	White-Orange	202	T	2
2	Orange-White	202	R	2
28	White-Green	----	----	----
3	Green-White	----	----	----
29	White-Brown	----	----	----
4	Brown-White	----	----	----
30	White-Slate	203	T	3
5	Slate-White	203	R	3
31	Red-Blue	204	T	4
6	Blue-Red	204	R	4
32	Red-Orange	----	----	----
7	Orange-Red	----	----	----
33	Red-Green	----	----	----
8	Green-Red	----	----	----
34	Red-Brown	225	T	31
9	Brown-Red	225	R	31
35	Red-Slate	226	T	32
10	Slate-Red	226	R	32
36	Black-Blue	----	----	----
11	Blue-Black	----	----	----
37	Black-Orange	----	----	----
12	Orange-Black	----	----	----
38	Black-Green	227	T	33
13	Green-Black	227	R	33
39	Black-Brown	228	T	34
14	Brown-Black	228	R	34
40	Black-Slate	----	----	----
15	Slate-Black	----	----	----
41	Yellow-Blue	----	----	----
16	Blue-Yellow	----	----	----
42	Yellow-Orange	----	----	----
17	Orange-Yellow	----	----	----
43	Yellow-Green	----	T	ET1
18	Green-Yellow	----	R	ET1
44	Yellow-Brown	----	T	ET2
19	Brown-Yellow	----	R	ET2

Pin	Wire color	Port	Service	Line
45	Yellow-Slate	----	----	----
20	Slate-Yellow	----	----	----
46	Violet-Blue	----	----	----
21	Blue-Violet	----	----	----
47	Violet-Orange	----	----	----
22	Orange-Violet	----	----	----
48	Violet-Green	----	----	----
23	Green-Violet	----	----	----
49	Violet-Brown	----	----	----
24	Brown-Violet	----	----	----
50	Violet-Slate	----	----	----
25	Slate-Violet	----	----	----

For an explanation of port numbering, see *Port numbering on the wiring charts* on page 260.

ICS external loop start lines wiring (profile 2)

Pin	Wire color	Port	Service	Line
26	White-Blue	201	T	1
1	Blue-White	201	R	1
27	White-Orange	202	T	2
2	Orange-White	202	R	2
28	White-Green	----	----	----
3	Green-White	----	----	----
29	White-Brown	----	----	----
4	Brown-White	----	----	----
30	White-Slate	203	T	3
5	Slate-White	203	R	3
31	Red-Blue	204	T	4
6	Blue-Red	204	R	4
32	Red-Orange	----	----	----
7	Orange-Red	----	----	----
33	Red-Green	----	----	----
8	Green-Red	----	----	----
34	Red-Brown	231	T	31
9	Brown-Red	231	R	31
35	Red-Slate	232	T	32
10	Slate-Red	232	R	32
36	Black-Blue	----	----	----
11	Blue-Black	----	----	----
37	Black-Orange	----	----	----

Pin	Wire color	Port	Service	Line
12	Orange-Black	----	----	----
38	Black-Green	233	T	33
13	Green-Black	233	R	33
39	Black-Brown	234	T	34
14	Brown-Black	234	R	34
40	Black-Slate	----	----	----
15	Slate-Black	----	----	----
41	Yellow-Blue	----	----	----
16	Blue-Yellow	----	----	----
42	Yellow-Orange	----	----	----
17	Orange-Yellow	----	----	----
43	Yellow-Green	----	T	ET1
18	Green-Yellow	----	R	ET1
44	Yellow-Brown	----	T	ET2
19	Brown-Yellow	----	R	ET2
45	Yellow-Slate	----	----	----
20	Slate-Yellow	----	----	----
46	Violet-Blue	----	----	----
21	Blue-Violet	----	----	----
47	Violet-Orange	----	----	----
22	Orange-Violet	----	----	----
48	Violet-Green	----	----	----
23	Green-Violet	----	----	----
49	Violet-Brown	----	----	----
24	Brown-Violet	----	----	----
50	Violet-Slate	----	----	----
25	Slate-Violet	----	----	----

BRI Wiring charts

A BRI Card in Slot 4 uses loops 201 through 204. A BRI card in Slot 3 uses loops 225 through 228 (profile 1, 3, or 4) or 231-238 (profile 2). Because a BRI-U2 Card has only two loops, it only uses the first two loop numbers 201-202 and 225-226, (profile 1, 3, or 4) or 231-232 (profile 2) when it occupies an ICS slot.

The loops appearing on a BRI card may be automatically assigned lines, or you can assign one or more ISDN DNs under

Hardware. If the loop is configured as T or NT, lines are automatically assigned. If the loop is configured as S or LT, you can assign one or more ISDN DNs to the loop.

The emergency telephone connections (ET2 and ET1) cannot be used if a BRI card is installed in Slot 3 or Slot 4.

For more information about configuring BRI cards refer to *BRI Card* on page 65 in *Welcome to ISDN* and *BRI card* on page 511 in *Hardware*.

ICS ST Interface Cards wiring (profile 1, 3 or 4)

Pin	Wire color	Port (loop)	Service	Lines (T-loop)	TE (S loop)
26	White-Blue	201	+Tx	001-002	Assigned DN
1	Blue-White	201	-Tx	001-002	Assigned DN
27	White-Orange	201	+Rx	001-002	Assigned DN
2	Orange-White	201	-Rx	001-002	Assigned DN
28	White-Green	202	+Tx	003-004	Assigned DN
3	Green-White	202	-Tx	003-004	Assigned DN
29	White-Brown	202	+Rx	003-004	Assigned DN
4	Brown-White	202	-Rx	003-004	Assigned DN
30	White-Slate	203	+Tx	005-006	Assigned DN
5	Slate-White	203	-Tx	005-006	Assigned DN
31	Red-Blue	203	+Rx	005-006	Assigned DN
6	Blue-Red	203	-Rx	005-006	Assigned DN
32	Red-Orange	204	+Tx	007-008	Assigned DN
7	Orange-Red	204	-Tx	007-008	Assigned DN
33	Red-Green	204	+Rx	007-008	Assigned DN
8	Green-Red	204	-Rx	007-008	Assigned DN
34	Red-Brown	225	+Tx	031-032	Assigned DN
9	Brown-Red	225	-Tx	031-032	Assigned DN
35	Red-Slate	225	+Rx	031-032	Assigned DN
10	Slate-Red	225	-Rx	031-032	Assigned DN
36	Black-Blue	226	+Tx	033-034	Assigned DN
11	Blue-Black	226	-Tx	033-034	Assigned DN
37	Black-Orange	226	+Rx	033-034	Assigned DN
12	Orange-Black	226	-Rx	033-034	Assigned DN
38	Black-Green	227	+Tx	035-036	Assigned DN
13	Green-Black	227	-Tx	035-036	Assigned DN

ICS ST Interface Cards wiring (profile 1, 3 or 4) (Continued)

Pin	Wire color	Port (loop)	Service	Lines (T-loop)	TE (S loop)
39	Black-Brown	227	+Rx	035-036	Assigned DN
14	Brown-Black	227	-Rx	035-036	Assigned DN
40	Black-Slate	228	+Tx	037-038	Assigned DN
15	Slate-Black	228	-Tx	037-038	Assigned DN
41	Yellow-Blue	228	+Rx	037-038	Assigned DN
16	Blue-Yellow	228	-Rx	037-038	Assigned DN
42	Yellow-Orange	----	----	----	---
17	Orange-Yellow	----	----	----	---
43	Yellow-Green	----	T	ET1	---
18	Green-Yellow	----	R	ET1	---
44	Yellow-Brown	----	T	ET2	---
19	Brown-Yellow	----	R	ET2	---
45	Yellow-Slate	----	----	----	---
20	Slate-Yellow	----	----	----	---
46	Violet-Blue	----	----	----	---
21	Blue-Violet	----	----	----	---
47	Violet-Orange	----	----	----	---
22	Orange-Violet	----	----	----	---
48	Violet-Green	----	----	----	---
23	Green-Violet	----	----	----	---
49	Violet-Brown	----	----	----	---
24	Brown-Violet	----	----	----	---
50	Violet-Slate	----	----	----	---
25	Slate-Violet	----	----	----	---

BRI S or T wiring is polarity sensitive.
Tx and Rx are Transmit and Receive for Norstar.

ICS ST Interface Cards wiring (profile 2)

Pin	Wire color	Port (loop)	Service	Lines (T-loop)	TE (S loop)
26	White-Blue	201	+Tx	001-002	Assigned DN
1	Blue-White	201	-Tx	001-002	Assigned DN
27	White-Orange	201	+Rx	001-002	Assigned DN
2	Orange-White	201	-Rx	001-002	Assigned DN
28	White-Green	202	+Tx	003-004	Assigned DN
3	Green-White	202	-Tx	003-004	Assigned DN
29	White-Brown	202	+Rx	003-004	Assigned DN
4	Brown-White	202	-Rx	003-004	Assigned DN
30	White-Slate	203	+Tx	005-006	Assigned DN
5	Slate-White	203	-Tx	005-006	Assigned DN

ICS ST Interface Cards wiring (profile 2) (Continued)

Pin	Wire color	Port (loop)	Service	Lines (T-loop)	TE (S loop)
31	Red-Blue	203	+Rx	005-006	Assigned DN
6	Blue-Red	203	-Rx	005-006	Assigned DN
32	Red-Orange	204	+Tx	007-008	Assigned DN
7	Orange-Red	204	-Tx	007-008	Assigned DN
33	Red-Green	204	+Rx	007-008	Assigned DN
8	Green-Red	204	-Rx	007-008	Assigned DN
34	Red-Brown	231	+Tx	031-032	Assigned DN
9	Brown-Red	231	-Tx	031-032	Assigned DN
35	Red-Slate	231	+Rx	031-032	Assigned DN
10	Slate-Red	231	-Rx	031-032	Assigned DN
36	Black-Blue	232	+Tx	033-034	Assigned DN
11	Blue-Black	232	-Tx	033-034	Assigned DN
37	Black-Orange	232	+Rx	033-034	Assigned DN
12	Orange-Black	232	-Rx	033-034	Assigned DN
38	Black-Green	233	+Tx	035-036	Assigned DN
13	Green-Black	233	-Tx	035-036	Assigned DN
39	Black-Brown	233	+Rx	035-036	Assigned DN
14	Brown-Black	233	-Rx	035-036	Assigned DN
40	Black-Slate	234	+Tx	037-038	Assigned DN
15	Slate-Black	234	-Tx	037-038	Assigned DN
41	Yellow-Blue	234	+Rx	037-038	Assigned DN
16	Blue-Yellow	234	-Rx	037-038	Assigned DN
42	Yellow-Orange	----	----	----	---
17	Orange-Yellow	----	----	----	---
43	Yellow-Green	----	T	ET1	---
18	Green-Yellow	----	R	ET1	---
44	Yellow-Brown	----	T	ET2	---
19	Brown-Yellow	----	R	ET2	---
45	Yellow-Slate	----	----	----	---
20	Slate-Yellow	----	----	----	---
46	Violet-Blue	----	----	----	---
21	Blue-Violet	----	----	----	---
47	Violet-Orange	----	----	----	---
22	Orange-Violet	----	----	----	---
48	Violet-Green	----	----	----	---
23	Green-Violet	----	----	----	---
49	Violet-Brown	----	----	----	---
24	Brown-Violet	----	----	----	---

ICS ST Interface Cards wiring (profile 2) (Continued)

Pin	Wire color	Port (loop)	Service	Lines (T-loop)	TE (S loop)
50	Violet-Slate	----	----	----	---
25	Slate-Violet	----	----	----	---

ICS U Interface Cards wiring (profile 1, 3 or 4)

Pin	Wire color	Port (loop)	Service	Lines (U-NT)	TE (U-LT)
26	White-Blue	201	T	001-002	Assigned DN
1	Blue-White	201	R	001-002	Assigned DN
27	White-Orange	202	T	003-004	Assigned DN
2	Orange-White	202	R	003-004	Assigned DN
28	White-Green	----	----	----	----
3	Green-White	----	----	----	----
29	White-Brown	----	----	----	----
4	Brown-White	----	----	----	----
30	White-Slate	203	T	005-006	Assigned DN
5	Slate-White	203	R	005-006	Assigned DN
31	Red-Blue	204	T	007-008	Assigned DN
6	Blue-Red	204	R	007-008	Assigned DN
32	Red-Orange	----	----	----	----
7	Orange-Red	----	----	----	----
33	Red-Green	----	----	----	----
8	Green-Red	----	----	----	----
34	Red-Brown	225	T	031-032	Assigned DN
9	Brown-Red	225	R	031-032	Assigned DN
35	Red-Slate	226	T	033-034	Assigned DN
10	Slate-Red	226	R	033-034	Assigned DN
36	Black-Blue	----	----	----	----
11	Blue-Black	----	----	----	----
37	Black-Orange	----	----	----	----
12	Orange-Black	----	----	----	----
38	Black-Green	227	T	035-036	Assigned DN
13	Green-Black	227	R	035-036	Assigned DN
39	Black-Brown	228	T	037-038	Assigned DN
14	Brown-Black	228	R	037-038	Assigned DN
40	Black-Slate	----	----	----	----
15	Slate-Black	----	----	----	----
41	Yellow-Blue	----	----	----	----
16	Blue-Yellow	----	----	----	----
42	Yellow-Orange	----	----	----	---

ICS U Interface Cards wiring (profile 1, 3 or 4) (Continued)

Pin	Wire color	Port (loop)	Service	Lines (U-NT)	TE (U-LT)
17	Orange-Yellow	----	----	----	---
43	Yellow-Green	----			---
18	Green-Yellow	----			---
44	Yellow-Brown	----			---
19	Brown-Yellow	----			---
45	Yellow-Slate	----	----	----	---
20	Slate-Yellow	----	----	----	---
46	Violet-Blue	----	----	----	---
21	Blue-Violet	----	----	----	---
47	Violet-Orange	----	----	----	---
22	Orange-Violet	----	----	----	---
48	Violet-Green	----	----	----	---
23	Green-Violet	----	----	----	---
49	Violet-Brown	----	----	----	---
24	Brown-Violet	----	----	----	---
50	Violet-Slate	----	----	----	---
25	Slate-Violet	----	----	----	---

BRI U wiring is not polarity sensitive.

For an explanation about port numbering, see *Port numbering on the wiring charts* on page 260.

ICS U Interface Cards wiring (profile 2)

Pin	Wire color	Port (loop)	Service	Lines (U-NT)	TE (U-LT)
26	White-Blue	201	T	001-002	Assigned DN
1	Blue-White	201	R	001-002	Assigned DN
27	White-Orange	202	T	003-004	Assigned DN
2	Orange-White	202	R	003-004	Assigned DN
28	White-Green	----	----	----	----
3	Green-White	----	----	----	----
29	White-Brown	----	----	----	----
4	Brown-White	----	----	----	----
30	White-Slate	203	T	005-006	Assigned DN
5	Slate-White	203	R	005-006	Assigned DN
31	Red-Blue	204	T	007-008	Assigned DN
6	Blue-Red	204	R	007-008	Assigned DN
32	Red-Orange	----	----	----	----
7	Orange-Red	----	----	----	----
33	Red-Green	----	----	----	----
8	Green-Red	----	----	----	----
34	Red-Brown	231	T	031-032	Assigned DN
9	Brown-Red	231	R	031-032	Assigned DN
35	Red-Slate	232	T	033-034	Assigned DN
10	Slate-Red	232	R	033-034	Assigned DN
36	Black-Blue	----	----	----	----
11	Blue-Black	----	----	----	----
37	Black-Orange	----	----	----	----
12	Orange-Black	----	----	----	----
38	Black-Green	233	T	035-036	Assigned DN
13	Green-Black	233	R	035-036	Assigned DN
39	Black-Brown	234	T	037-038	Assigned DN
14	Brown-Black	234	R	037-038	Assigned DN
40	Black-Slate	----	----	----	----
15	Slate-Black	----	----	----	----
41	Yellow-Blue	----	----	----	----
16	Blue-Yellow	----	----	----	----
42	Yellow-Orange	----	----	----	---
17	Orange-Yellow	----	----	----	---
43	Yellow-Green	----			---
18	Green-Yellow	----			---
44	Yellow-Brown	----			---
19	Brown-Yellow	----			---

ICS U Interface Cards wiring (profile 2) (Continued)

Pin	Wire color	Port (loop)	Service	Lines (U-NT)	TE (U-LT)
45	Yellow-Slate	----	----	----	---
20	Slate-Yellow	----	----	----	---
46	Violet-Blue	----	----	----	---
21	Blue-Violet	----	----	----	---
47	Violet-Orange	----	----	----	---
22	Orange-Violet	----	----	----	---
48	Violet-Green	----	----	----	---
23	Green-Violet	----	----	----	---
49	Violet-Brown	----	----	----	---
24	Brown-Violet	----	----	----	---
50	Violet-Slate	----	----	----	---
25	Slate-Violet	----	----	----	---

BRI U wiring is not polarity sensitive.

Wiring the BRI network interface

A network interface provides the connection between the ISDN network and the Modular ICS.

If the card in the ICS is configured as a T-loop, the ICS is wired to the network connection using an NT1.
See *T reference points* on page 68 for more information about the NT1.

Wiring for T network connection

Pin (jack or plug)	NT1 connection (for jack)	ICS and optional TE connection (plug)
1	not used	optional power source 3 (+)
2	not used	optional power source 3 (-)
3	+Rx	+Tx
4	+Tx	+Rx
5	-Tx	-Rx
6	-Rx	-Tx
7	not used	optional power sink 2 (-)
8	not used	optional power sink 2 (+)

The Modular ICS supplies the NT1 functionality to a U-NT loop, allowing a direct connection to the network. The connection may use a plug and jack, or may be directly wired.

Wiring for U-NT network interface

Pin (jack or plug)	Norstar connection (for plug to network interface jack)	Network interface connection (jack)
1	not used	optional battery status indicator (+)
2	not used	optional battery status indicator (-)
3	not used	no connection
4	R	R
5	T	T
6	not used	no connection
7	not used	optional power supply (-)
8	not used	optional power supply (+)

The BRI-U Card does not use or provide optional power.
Some installations may not use a plug and jack for connections between the ICS (NT) and the network.

The following illustration shows the pin arrangement for a Bellcore standard ISDN plug and jack. Other pin arrangements are possible.

Jack and plug pin numbering

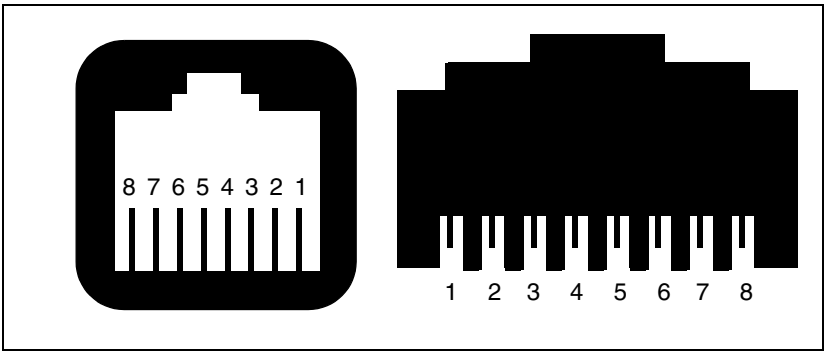

DTI wiring

Connecting the DTI to the T1 or PRI service provider

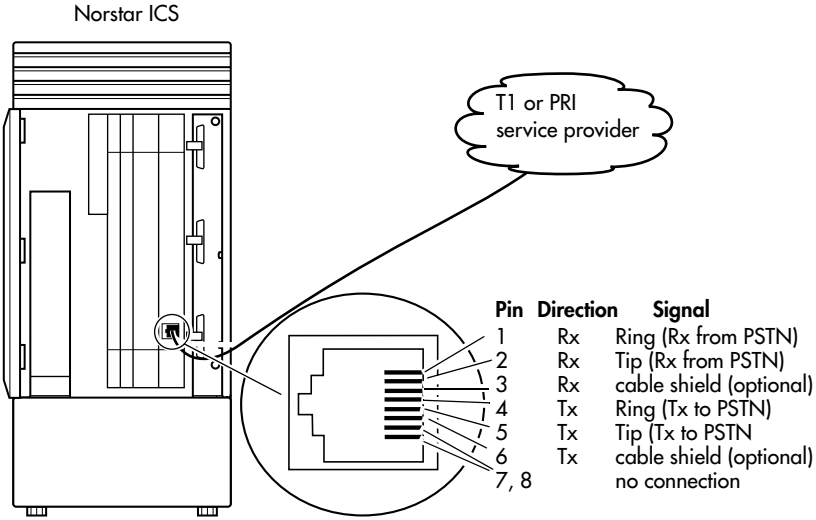

Connecting the DTI to an external CSU

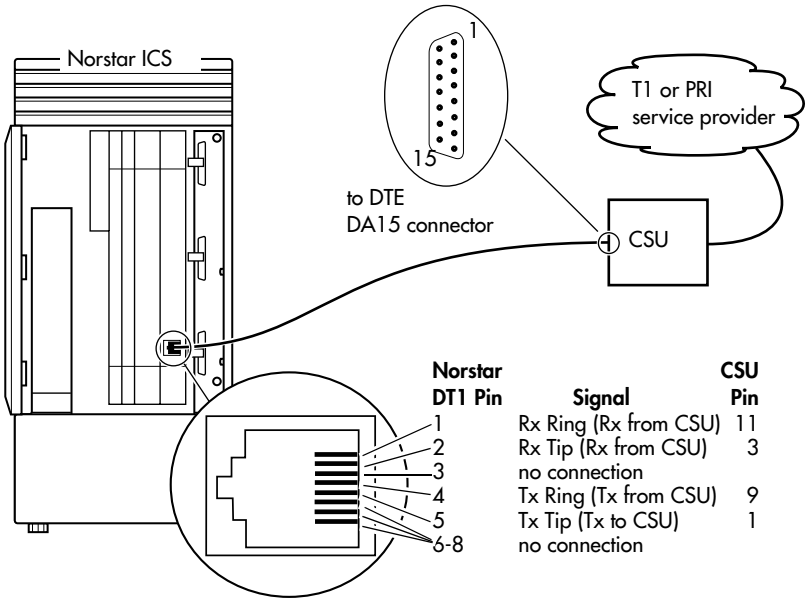

Station Module wiring chart

Pin	Wire color	Port	Service	Telephones SM
26	White-Blue	X01	T	1
1	Blue-White	X01	R	1
27	White-Orange	X02	T	2
2	Orange-White	X02	R	2
28	White-Green	X03	T	3
3	Green-White	X03	R	3
29	White-Brown	X04	T	4
4	Brown-White	X04	R	4
30	White-Slate	X05	T	5
5	Slate-White	X05	R	5
31	Red-Blue	X06	T	6
6	Blue-Red	X06	R	6
32	Red-Orange	X07	T	7
7	Orange-Red	X07	R	7
33	Red-Green	X08	T	8
8	Green-Red	X08	R	8
34	Red-Brown	X09	T	9
9	Brown-Red	X09	R	9
35	Red-Slate	X10	T	10
10	Slate-Red	X10	R	10
36	Black-Blue	X11	T	11
11	Blue-Black	X11	R	11
37	Black-Orange	X12	T	12
12	Orange-Black	X12	R	12
38	Black-Green	X13	T	13
13	Green-Black	X13	R	13
39	Black-Brown	X14	T	14
14	Brown-Black	X14	R	14
40	Black-Slate	X15	T	15
15	Slate-Black	X15	R	15
41	Yellow-Blue	X16	T	16
16	Blue-Yellow	X16	R	16
42	Yellow-Orange	----	----	no connection
17	Orange-Yellow	----	----	no connection
43	Yellow-Green	----	----	no connection
18	Green-Yellow	----	----	no connection
44	Yellow-Brown	----	----	no connection
19	Brown-Yellow	----	----	no connection
45	Yellow-Slate	----	----	no connection
20	Slate-Yellow	----	----	no connection
46	Violet-Blue	----	----	no connection

Station Module wiring chart (Continued)

Pin	Wire color	Port	Service	Telephones SM
21	Blue-Violet	----	----	no connection
47	Violet-Orange	----	----	no connection
22	Orange-Violet	----	----	no connection
48	Violet-Green	----	----	no connection
23	Green-Violet	----	----	no connection
49	Violet-Brown	----	----	no connection
24	Brown-Violet	----	----	no connection
50	Violet-Slate	----	----	no connection
25	Slate-Violet	----	----	no connection

T and R represent station connections and should not be confused with Tip and Ring on external lines. Station connections are non-polarized.
For an explanation about port numbering, see *Port numbering on the wiring charts* on page 260.
Note: Central Answering Positions (CAPs) that require a station auxiliary power supply (SAPS) must be connected with a four-wire cord, as the SAPS is connected to the second wire pair. This includes any 7324 digital phone and CAP module combination, and any 7316E digital phone attached to more than 4 KIMs. Refer to the SAPS installation card for detailed installation instructions.
Nortel Networks Digital Mobility Controller 080/085 only require a maximum of eight pairs on a digital connector. The remaining pairs can be connected to other digital system telephones.

Loop Start or CI Trunk Cartridge wiring chart

TC Slot	Pin	Wire color	Port	Service	Line
Slot 1	26	White-Blue	X01	T	1
	1	Blue-White	X01	R	1
	27	White-Orange	X02	T	2
	2	Orange-White	X02	R	2
	28	White-Green	----	No connection	----
	3	Green-White	----	No connection	----
	29	White-Brown	----	No connection	----
	4	Brown-White	----	No connection	----
	30	White-Slate	X03	T	3
	5	Slate-White	X03	R	3
	31	Red-Blue	X04	T	4
	6	Blue-Red	X04	R	4
	32	Red-Orange	----	No connection	----
	7	Orange-Red	----	No connection	----
	33	Red-Green	----	No connection	----
	8	Green-Red	----	No connection	----
Slot 2	34	Red-Brown	X05	T	5
	9	Brown-Red	X05	R	5
	35	Red-Slate	X06	T	6
	10	Slate-Red	X06	R	6
	36	Black-Blue	----	No connection	----
	11	Blue-Black	----	No connection	----
	37	Black-Orange	----	No connection	----

Loop Start or CI Trunk Cartridge wiring chart (Continued)

TC Slot	Pin	Wire color	Port	Service	Line
	12	Orange-Black	----	No connection	----
	38	Black-Green	X07	T	7
	13	Green-Black	X07	R	7
	39	Black-Brown	X08	T	8
	14	Brown-Black	X08	R	8
	40	Black-Slate	----	No connection	----
	15	Slate-Black	----	No connection	----
	41	Yellow-Blue	----	No connection	----
Slot 3	42	Yellow-Orange	X09	T	9
	17	Orange-Yellow	X09	R	9
	43	Yellow-Green	X10	T	10
	18	Green-Yellow	X10	R	10
	44	Yellow-Brown	----	No connection	----
	19	Brown-Yellow	----	No connection	----
	45	Yellow-Slate	----	No connection	----
	20	Slate-Yellow	----	No connection	----
	46	Violet-Blue	X11	T	11
	21	Blue-Violet	X11	R	11
	47	Violet-Orange	X12	T	12
	22	Orange-Violet	X12	R	12
	48	Violet-Green	----	No connection	----
	23	Green-Violet	----	No connection	----
	49	Violet-Brown	----	No connection	----
	24	Brown-Violet	----	No connection	----
	50	Violet-Slate	----	ET	----
	25	Slate-Violet	----	ET	----

For an explanation about port numbering, see *Port numbering on the wiring charts* on page 260.

E&M/DISA Trunk Cartridge wiring chart

Use the table, *Trunk Module with E&M/DISA Trunk Cartridges,* on page 282 when a Trunk Module has only E&M/DISA Trunk Cartridges.

If the Norstar system is being connected to another Norstar system or private branch exchange by connecting two RJ2HX/CA2HA distribution blocks together, use the following table to determine the required cross-connections.

Back-to-back cross-connections

1st distribution block	T	R	T1	R1	E	SG	M	SB
Next distribution block	T1	R1	T	R	SB	M	SG	E

Tips - *When installing a mixture of E&M/DISA, DID, BRI, or Loop Start Trunk Cartridges, it is important to cross-connect the wiring for each type of TC to a separate distribution block.*

To verify the operation of the Norstar E&M cards and the target lines, wire the two E&M lines on the Norstar E&M back to back.

The cross-connections to each distribution block must always begin at pins 26 and 1. To retain emergency telephone function (when it is available on the trunk module), install a Loop Start Trunk Cartridge in the left-most slot (slot 1) of the TM.

Trunk Module with E&M/DISA Trunk Cartridges

TC Slot	Pin	Wire color	Port	Service	Line
Slot 1	26	White-Blue	X01	T	1
	1	Blue-White	X01	R	1
	27	White-Orange	X01	T1	1
	2	Orange-White	X01	R1	1
	28	White-Green	X01	E	1
	3	Green-White	X01	SG	1
	29	White-Brown	X01	M	1
	4	Brown-White	X01	SB	1
	30	White-Slate	X02	T	2
	5	Slate-White	X02	R	2

Trunk Module with E&M/DISA Trunk Cartridges (Continued)

TC Slot	Pin	Wire color	Port	Service	Line
	31	Red-Blue	X02	T1	2
	6	Blue-Red	X02	R1	2
	32	Red-Orange	X02	E	2
	7	Orange-Red	X02	SG	2
	33	Red-Green	X02	M	2
	8	Green-Red	X02	SB	2
Slot 2	34	Red-Brown	X05	T	5
	9	Brown-Red	X05	R	5
	35	Red-Slate	X05	T1	5
	10	Slate-Red	X05	R1	5
	36	Black-Blue	X05	E	5
	11	Blue-Black	X05	SG	5
	37	Black-Orange	X05	M	5
	12	Orange-Black	X05	SB	5
	38	Black-Green	X06	T	6
	13	Green-Black	X06	R	6
	39	Black-Brown	X06	T1	6
	14	Brown-Black	X06	R1	6
	40	Black-Slate	X06	E	6
	15	Slate-Black	X06	SG	6
	41	Yellow-Blue	X06	M	6
	16	Blue-Yellow	X06	SB	6
Slot 3	42	Yellow-Orange	X09	T	9
	17	Orange-Yellow	X09	R	9
	43	Yellow-Green	X09	T1	9
	18	Green-Yellow	X09	R1	9
	44	Yellow-Brown	X09	E	9
	19	Brown-Yellow	X09	SG	9
	45	Yellow-Slate	X09	M	9
	20	Slate-Yellow	X09	SB	9
	46	Violet-Blue	X10	T	10
	21	Blue-Violet	X10	R	10
	47	Violet-Orange	X10	T1	10
	22	Orange-Violet	X10	R1	10
	48	Violet-Green	X10	E	10
	23	Green-Violet	X10	SG	10
	49	Violet-Brown	X10	M	10
	24	Brown-Violet	X10	SB	10
	50	Violet-Slate	----	reserved	----
	25	Slate-Violet	----	reserved	----

For an explanation about port numbering, see *Port numbering on the wiring charts* on page 260.

Trunk Module with DID Trunk Cartridges

TC Slot	Pin	Wire color	Port	Service	Line
Slot 1	26	White-Blue	X01	T	1
	1	Blue-White	X01	R	1
	27	White-Orange	X02	T	2
	2	Orange-White	X02	R	2
	28	White-Green	----	No connection	----
	3	Green-White	----	No connection	----
	29	White-Brown	----	CCI NC1	----
	4	Brown-White	----	CCI Com1	----
	30	White-Slate	X03	T	3
	5	Slate-White	X03	R	3
	31	Red-Blue	X04	T	4
	6	Blue-Red	X04	R	4
	32	Red-Orange	----	No connection	----
	7	Orange-Red	----	No connection	----
	33	Red-Green	----	No connection	----
	8	Green-Red	----	No connection	----
Slot 2	34	Red-Brown	X05	T	5
	9	Brown-Red	X05	R	5
	35	Red-Slate	X06	T	6
	10	Slate-Red	X06	R	6
	36	Black-Blue	----	No connection	----
	11	Blue-Black	----	No connection	----
	37	Black-Orange	----	CCI NC1	----
	12	Orange-Black	----	CCI Com1	----
	38	Black-Green	X07	T	7
	13	Green-Black	X07	R	7
	39	Black-Brown	X08	T	8
	14	Brown-Black	X08	R	8
	40	Black-Slate	----	No connection	----
	15	Slate-Black	----	No connection	----
	41	Yellow-Blue	----	No connection	----
	16	Blue-Yellow	----	No connection	----
Slot 3	42	Yellow-Orange	X09	T	9
	17	Orange-Yellow	X09	R	9
	43	Yellow-Green	X10	T	10
	18	Green-Yellow	X10	R	10
	44	Yellow-Brown	----	No connection	----
	19	Brown-Yellow	----	No connection	----
	45	Yellow-Slate	----	CCI NC1	----
	20	Slate-Yellow	----	CCI Com1	----
	46	Violet-Blue	X11	T	11

Trunk Module with DID Trunk Cartridges (Continued)

TC Slot	Pin	Wire color	Port	Service	Line
	21	Blue-Violet	X11	R	11
	47	Violet-Orange	X12	T	12
	22	Orange-Violet	X12	R	12
	48	Violet-Green	----	No connection	----
	23	Green-Violet	----	No connection	----
	49	Violet-Brown	----	No connection	----
	24	Brown-Violet	----	No connection	----
	50	Violet-Slate	----	ET	----
	25	Slate-Violet	----	ET	----

For an explanation about port numbering, see *Port numbering on the wiring charts* on page 260.
For CCI connections in Service column: NC1 stands for the normally closed relay and Com1, the common relay.
CCI signaling is not supported by all carriers. For carriers or installations that do not use CCI signaling, the CCI and ET connections should be treated as “no connection”. CCI wiring is a non-standard wiring arrangement which has been submitted to the DOC.

DID supervisory signaling

This equipment returns supervisory signals to the public switched telephone network (PSTN) when the DID calls are:

- answered by the called telephone
- answered by the attendant
- routed to a customer controlled recorded announcement
- routed to a dial prompt

This equipment is designed to return supervisory signals on all DID calls forwarded through the system back to the PSTN within 20 seconds of call forwarding being initiated.

Emergency transfer conditions

Every DID Trunk Cartridge has a Control Circuit Interface (CCI) which should be connected directly to the central office for monitoring purposes.

If the Norstar system loses power or the microcontroller on the DID Trunk Cartridge malfunctions, the CCI signals the central office that it can no longer handle DID calls. The central

office, by prearrangement, then forwards the DID lines to other numbers.

Connect the CCI com1 connection to a ground connection. Connect the CCI NC1 connection to the central office demarcation.

Tips - *CCI signaling to report power loss or malfunction of the DID Trunk Cartridge is not supported by all carriers. For carriers or installations which do not use CCI signaling, the CCI and ET connections are treated as not connected.*

Wire each CCI independently to the central office. If the connections are wired in parallel, any CCI trouble disables all DID Trunk Cartridges. If the connections are wired in series, all DID Trunk Cartridges must fail before the central office recognizes the trouble condition.

Trunk Module with BRI-ST cartridge

TC slot	Pin	Wire color	Port (loop)	Service	Lines (T or S loop)	Terminal equipment S loop)
Slot 1	26	White-Blue	X01	+Tx	001-002	Assigned DN
	1	Blue-White	X01	-Tx	001-002	Assigned DN
	27	White-Orange	X01	+Rx	001-002	Assigned DN
	2	Orange-White	X01	-Rx	001-002	Assigned DN
	28	White-Green	X02	+Tx	003-004	Assigned DN
	3	Green-White	X02	-Tx	003-004	Assigned DN
	29	White-Brown	X02	+Rx	003-004	Assigned DN
	4	Brown-White	X02	-Rx	003-004	Assigned DN
	30	White-Slate	X03	+Tx	005-006	Assigned DN
	5	Slate-White	X03	-Tx	005-006	Assigned DN
	31	Red-Blue	X03	+Rx	005-006	Assigned DN
	6	Blue-Red	X03	-Rx	005-006	Assigned DN
	32	Red-Orange	X04	+Tx	007-008	Assigned DN
	7	Orange-Red	X04	-Tx	007-008	Assigned DN
	33	Red-Green	X04	+Rx	007-008	Assigned DN
	8	Green-Red	X04	-Rx	007-008	Assigned DN
Slot 2	34	Red-Brown	X05	+Tx	009-010	Assigned DN
	9	Brown-Red	X05	-Tx	009-010	Assigned DN
	35	Red-Slate	X05	+Rx	009-010	Assigned DN
	10	Slate-Red	X05	-Rx	009-010	Assigned DN
	36	Black-Blue	X06	+Tx	011-012	Assigned DN
	11	Blue-Black	X06	-Tx	011-012	Assigned DN
	37	Black-Orange	X06	+Rx	011-012	Assigned DN
	12	Orange-Black	X06	-Rx	011-012	Assigned DN
	38	Black-Green	X07	+Tx	013-014	Assigned DN
	13	Green-Black	X07	-Tx	013-014	Assigned DN
	39	Black-Brown	X07	+Rx	013-014	Assigned DN
	14	Brown-Black	X07	-Rx	013-014	Assigned DN
	40	Black-Slate	X08	+Tx	015-016	Assigned DN
	15	Slate-Black	X08	-Tx	015-016	Assigned DN
	41	Yellow-Blue	X08	+Rx	015-016	Assigned DN
	16	Blue-Yellow	X08	-Rx	015-016	Assigned DN

Trunk Module with BRI-ST cartridge (Continued)

TC slot	Pin	Wire color	Port (loop)	Service	Lines (T or S loop)	Terminal equipment S loop)
Slot 3	42	Yellow-Orange	X09	+Tx	017-018	Assigned DN
	17	Orange-Yellow	X09	-Tx	017-018	Assigned DN
	43	Yellow-Green	X09	+Rx	017-018	Assigned DN
	18	Green-Yellow	X09	-Rx	017-018	Assigned DN
	44	Yellow-Brown	X10	+Tx	019-020	Assigned DN
	19	Brown-Yellow	X10	-Tx	019-020	Assigned DN
	45	Yellow-Slate	X10	+Rx	019-020	Assigned DN
	20	Slate-Yellow	X10	-Rx	019-020	Assigned DN
	46	Violet-Blue	X11	+Tx	021-022	Assigned DN
	21	Blue-Violet	X11	-Tx	021-022	Assigned DN
	47	Violet-Orange	X11	+Rx	021-022	Assigned DN
	22	Orange-Violet	X11	-Rx	021-022	Assigned DN
	48	Violet-Green	X12	+Tx	023-024	Assigned DN
	23	Green-Violet	X12	-Tx	023-024	Assigned DN
	49	Violet-Brown	X12	+Rx	023-024	Assigned DN
	24	Brown-Violet	X12	-Rx	023-024	Assigned DN
	50	Violet-Slate	----	reserved	----	----
	25	Slate-Violet	----	reserved	----	----

To determine the assigned lines for a BRI card, refer to BRI and T1 lines on page 563.
For an explanation about port numbering, see Port numbering on the wiring charts on page 260.

Trunk Module with BRI-U cartridge

TC slot	Pin	Wire color	Port (loop)	Service	Lines (U-NT)	Terminal equipment (U-LT)
Slot 1	26	White-Blue	X01	T	001-002	Assigned DN
	1	Blue-White	X01	R	001-002	Assigned DN
	27	White-Orange	X02	T	003-004	Assigned DN
	2	Orange-White	X02	R	003-004	Assigned DN
	28	White-Green	----	----	----	----
	3	Green-White	----	----	----	----
	29	White-Brown	----	----	----	----
	4	Brown-White	----	----	----	----
	30	White-Slate	X03	T	005-006	Assigned DN
	5	Slate-White	X03	R	005-006	Assigned DN
	31	Red-Blue	X04	T	007-008	Assigned DN
	6	Blue-Red	X04	R	007-008	Assigned DN

TC slot	Pin	Wire color	Port (loop)	Service	Lines (U-NT)	Terminal equipment (U-LT)
	32	Red-Orange	----	----	----	----
	7	Orange-Red	----	----	----	----
	33	Red-Green	----	----	----	----
	8	Green-Red	----	----	----	----
Slot 2	34	Red-Brown	X05	T	009-010	Assigned DN
	9	Brown-Red	X05	R	009-010	Assigned DN
	35	Red-Slate	X06	T	011-012	Assigned DN
	10	Slate-Red	X06	R	011-012	Assigned DN
	36	Black-Blue	----	----	----	----
	11	Blue-Black	----	----	----	----
	37	Black-Orange	----	----	----	----
	12	Orange-Black	----	----	----	----
	38	Black-Green	X07	T	013-014	Assigned DN
	13	Green-Black	X07	R	013-014	Assigned DN
	39	Black-Brown	X08	T	015-016	Assigned DN
	14	Brown-Black	X08	R	015-016	Assigned DN
	40	Black-Slate	----	----	----	----
	15	Slate-Black	----	----	----	----
	41	Yellow-Blue	----	----	----	----
	16	Blue-Yellow	----	----	----	----
Slot 3	42	Yellow-Orange	X09	T	017-018	Assigned DN
	17	Orange-Yellow	X09	R	017-018	Assigned DN
	43	Yellow-Green	X10	T	019-020	Assigned DN
	18	Green-Yellow	X10	R	019-020	Assigned DN
	44	Yellow-Brown	----	----	----	----
	19	Brown-Yellow	----	----	----	----
	45	Yellow-Slate	----	----	----	----
	20	Slate-Yellow	----	----	----	----
	46	Violet-Blue	X11	T	021-022	Assigned DN
	21	Blue-Violet	X11	R	021-022	Assigned DN
	47	Violet-Orange	X12	T	023-024	Assigned DN
	22	Orange-Violet	X12	R	023-024	Assigned DN
	48	Violet-Green	----	----	----	---
	23	Green-Violet	----	----	----	---
	49	Violet-Brown	----	----	----	---
	24	Brown-Violet	----	----	----	---
	50	Violet-Slate	----	reserved	----	---
	25	Slate-Violet	----	reserved	----	---

BRI U wiring is not polarity sensitive.
A BRI-U2 Card only uses the first two loop numbers (X01-X02, X05-X06, or X09-X10) when it occupies a trunk module slot.

Emergency telephone

You can connect an emergency telephone to an ICS or Trunk Module (TM) with a Loop Start Trunk Cartridge to provide emergency service when there is no power to the ICS. The ICS has emergency telephone connections for lines 002 and 026 (profile 1, 3 and 4) or 002 to 030 (profile 2). Each Trunk Module has one emergency telephone connection.

These versions of the Global Trunk module do not support emergency telephones:

NTBB1202 TM With Auto Ranging power supply.
NTBB20AD-93 UK Class B TM
NTBB20AE-93 Australia TM
NTBB20FD-93 Eng/Fr TM
NTBB20FF-93 Cala TM
NTBB20FG-93 International TM

1. Wire a modular jack or equivalent to each set of emergency telephone pins on the 50-pin distribution block for the ICS or Trunk Module external lines.
   Refer to *Wiring charts* on page 260 for the pin numbers.
2. Connect a single-line telephone (500/2500) to the modular jack.
3. Prepare to test the emergency telephone by removing the Trunk Cartridge from the slot (slot 3 or 4 on the ICS, and slot 1 on the TM).
4. Connect the power, then connect the central office lines to the ICS.
5. Pick up the emergency telephone receiver and listen for dial tone.

6. Disconnect the central office lines, then remove power from the system.
7. Replace the Trunk Cartridge in the left slot.
8. Continue with procedures for powering up the system.

Tips - *The emergency telephone connections on the Trunk Module will not work if there is an E&M/DISA, a BRI-ST or BRI-U card, or a DID Trunk Cartridge in the first slot of the Trunk Module. The emergency telephone connections on the ICS will not work if DTIs or PRIs are used.*

Tips - *system digital telephones cannot be used as off-premise telephones (OPX). For OPX applications, use the Norstar Analog Terminal Adapter (ATA2) and a single-line telephone. Refer to the ATA Installation Card for details.*

Moving telephones

You can move a system telephone to a new location within the Norstar system without losing the programmed settings.

When `Set relocation` is enabled in system programming, the internal numbers, autodial settings, and personal speed dial codes remain with the telephone when it is unplugged.

To move a telephone, simply unplug it and plug it in again at another location. It may take up to 45 seconds for the ICS to recognize the telephone. Automatic telephone relocation is disabled by default.

Tips - *Relocate the disconnected system telephone before connecting a new telephone into the vacated jack. This allows the moved telephone to retain the programmed settings.*

If a new telephone is plugged into the vacated jack before the old telephone is reconnected at a new location, Norstar will give the current telephone information to the new telephone. The old telephone will no longer be recognized by the system.

When reprogramming the internal number of a telephone, wait one minute after Automatic Telephone Relocation.

When you relocate a telephone, the telephone must remain installed and connected in the new location for at least three minutes for the programming relocation to be complete. Moving the telephone again before the three-minute period may result in losing the programming on the telephone.

Installing ISDN BRI terminal equipment

For each S or T or U-LT reference point, an eight-position miniature unkeyed plug from the terminal equipment (TE) is plugged into a jack connected to Norstar wiring. The pin connections for the jack and plug are shown in the following charts.

S or T wiring for terminal equipment

Pin (jack or plug)	Norstar connection (for jack)	Equipment connection (plug)
1	not used	optional power source 3 (+)
2	not used	optional power source 3 (-)
3	+Rx	+Rx
4	+Tx	+Tx
5	-Tx	-Tx
6	-Rx	-Rx
7	not used	optional power sink 2 (-)
8	not used	optional power sink 2 (+)

S or T extension wiring configurations

The last connection on any ISDN S or T extension wiring must have terminating resistors to ensure correct timing of the signaling circuits. Failure to install terminating resistors will degrade performance. Terminating resistors should not be connected on a TE which is not the last connection on the loop.

Terminating resistors are provided on terminal equipment. See the instructions that come with your TE for information about how to enable or disable the termination, as required.

The maximum length of spur and ISDN connection cord (the extension from the main line or bus) is 10 m (30 ft).

Refer to *S reference point* on page 67 and *T reference points* on page 68 in the *Welcome to ISDN* chapter for information about wiring arrangements for ISDN terminal equipment (TE) on an S or T loop.

Additional power

A Norstar S or T-loop does not provide power on Power Source 1 (PS1), Power Source (PS2), or Power Source or Sink 3 (PS3). If you are installing ISDN terminal equipment at the S-reference point, and the equipment requires additional power on PS1, PS2, or PS3, then you can install a suitably-approved power supply unit. See ANSI T1.605 or the documentation that comes with your TE for details.

The Modular ICS does not require power on PS3.

Wiring arrangements using side circuits, also called phantom circuits, may affect loop performance when they are used to provide power to the TE (PS1). You must account for any effects. For example, you may need to reduce the number of TEs on a passive bus.

U-LT wiring for terminal equipment

Pin (jack or plug)	Norstar connection (for jack)	Equipment connection (plug)
1	not used	optional battery status indication (+)
2	not used	optional battery status indication (-)
3	not used	no connection
4	R	R
5	T	T
6	not used	no connection
7	not used	optional power (-)
8	not used	optional power (+)

No power supply is provided for the U-LT wiring. If equipment attached to the U-LT loop requires optional power, install an approved power supply unit. See ANSI T1.601-1992 Annex H or the documentation that comes with your TE for more information.

Jack and plug pin numbering

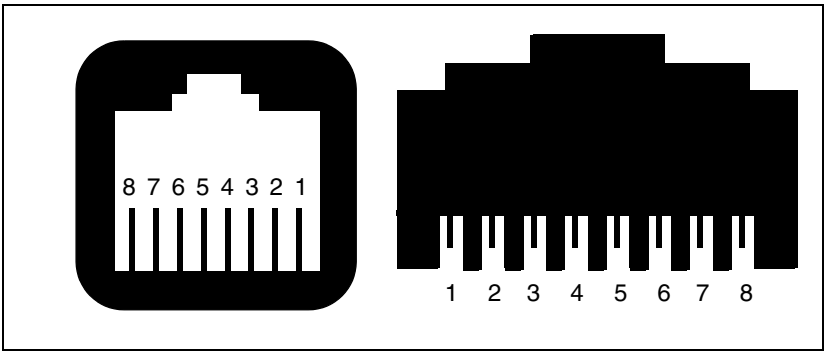

Installing optional equipment

This section describes the installation procedures for optional, customer-suppled equipment.

Auxiliary ringer (customer supplied)

The Norstar ICS provides a control contact to operate an auxiliary ringer.

1. Follow the installation instructions provided by the manufacturer.
2. Connect the auxiliary ring generator to the 50-pin distribution block as shown in the wiring charts.

   The pins in this chart provide a control contact. They do not provide ring current or DC voltage. The ringer must not draw more than 50 mA from a 40 V DC source.

Auxiliary ringer programming

The auxiliary ringer can be activated by setting auxiliary ring for specific external lines, and auxiliary ring for specific telephones. Refer to the *Modular ICS 7.0 System Coordinator Guide* for programming details.

Heading
Trk/Line Data
Capabilities
Services

External music source (customer supplied)

The music source can be any approved low-power device such as a radio with a high-impedance earphone jack. The recommended ICS input level is 0.25 V rms across an input impedance of 3300 Ω.

1. Connect the music source output to the 50-pin distribution block, as shown in the wiring charts.
2. Adjust the volume of the music source to a comfortable level by activating Background Music ([ ] 8 6) and adjusting the volume at the music source.

Tips - *Background Music volume can also be adjusted at each telephone.*

External music source programming

Music for callers on Hold and for Background Music must be enabled through programming. Refer to *Backgrnd music* on page 430 for more details.

Confirm that the following settings are implemented:

Heading	Setting
Featr settings	On hold: **Music**
Featr settings	Backgrnd music: **Y**

External paging system (customer supplied)

You can connect an external paging system to provide paging over external loudspeakers. The paging output from the Norstar ICS is 100 mV rms across an input impedance of 600 Ω

1. Follow the installation instructions provided by the manufacturer.
2. Connect the paging system audio input to the 50-pin distribution block as shown in the wiring charts.
3. Connect the paging system relay to the 50-pin distribution block as shown in the wiring charts.

External paging contacts

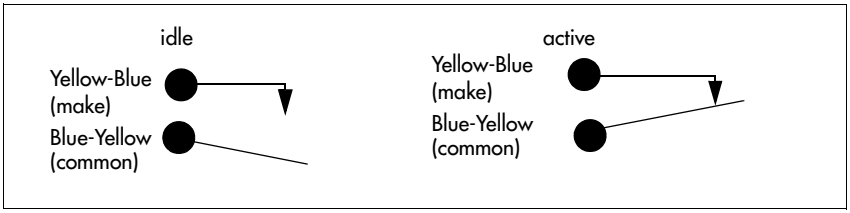

Tips - *Norstar external paging does not support talk-back paging equipment unless an external line port is used.*

The Norstar system provides paging over the Norstar telephone speakers, even when no external paging equipment is connected.

Powering up the system

1. Double-check all wiring before turning the system power on. Ensure all outlets where you will plug in the modules are non-switchable, third-wire ground AC outlets.

> Do not connect central office line cables to the modules until after the system power is on.

2. If you are installing a modular mobility system, ensure that all base stations are installed and connected to the appropriate modules.
3. Route the module power cords through the lower shelf of the cable trough and out through the bottom of the ICS cable trough.
4. Route the ICS power cord through the bottom of the ICS cable trough.

> ***Companion: Install Base Stations before powering up the MICS-XC system.***

5. Connect each power cord to an electrical outlet.

   If you are using a power bar, plug the power cords into the power bar, and then connect the power bar to the AC outlet.

> ***Do not fasten power supply cords.***
>
> Do not fasten the ICS power supply cord or module power supply cords to any building surface, including the backboard.

Close and lock the ICS door.

Close and lock the ICS door after installation is complete to avoid accidental shock and to provide containment in the event of fire.

Check the power

After the power is supplied, the ICS power supply LEDs will light up green. If a BRI cartridge is installed, the LEDs on the faceplate of the cartridge will flash for up to five minutes. Telephones and lines also may take up to five minutes to initialize.

1. Check that the power LEDs of the power supply, the TMs, and the SMs are on.
2. If none of the LEDs are on, verify that power is present at the outlet. If there is power at the outlet, see *Problems for network or remote users* on page 621.

Tips - *During system initialization, the system performs a self-diagnostic test on the hardware configuration size and expansion cartridge installation.*

Once the system is initialized and the telephone displays read `Jan 1 1:00 am`, you have 15 minutes in which to perform Profile, Dialpad, and Startup programming. After 15 minutes, access to Startup programming is denied.

Tips - *After system startup, you can turn the power off and on and retain any system data that has been entered. This is considered a warm start. A warm start takes approximately 5-10 minutes. However, if you run Startup again, the default programming will be reestablished.*

Call Log information may be lost.

If the Norstar system suffers a power failure or the system is manually restarted, Call Log information is not saved. Notify users if a system restart is planned so any log information can be written down first.

System power indicators

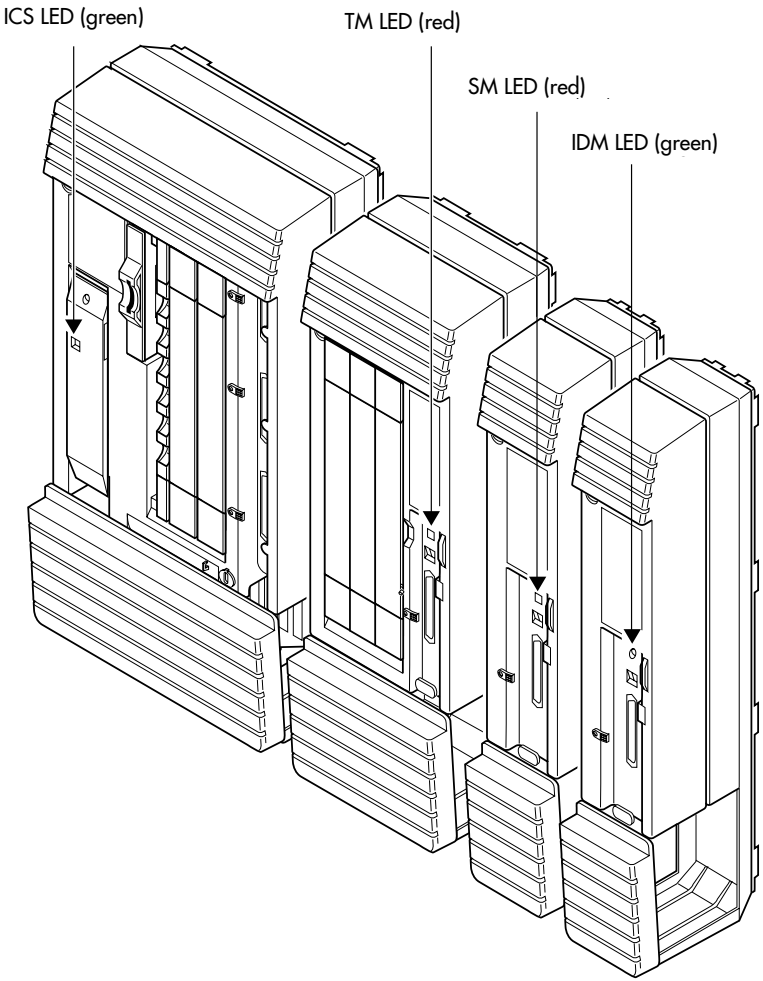

Programming

The installer or the customer service representative programs settings for the entire Norstar system, plus settings for individual telephones and external lines.

Most of the settings can also be programmed by a system coordinator who has a SysCoord+ password. The SysCoord+ password should only be used by individuals who are capable of programming the Norstar ICS. Further, this level of access should only be distributed to System Coordinators who are more experienced in programming the Norstar ICS.

Programming affects system operation.

Only a qualified installer or customer service representative should perform startup, installation and maintenance programming. Some of the settings affect the correct operation of the system.

Programming overview

Programming access is controlled by these passwords.

- Profile password — allows you to determine the system profile. The default profile is the profile used for North American applications.
- Dialpad password — allows you to determine the style of dialpad programming for your system. This setting determines which key you press to obtain the letters Q and Z. The default is non_CCITT (press 0 for both letters).
- Installer password — allows you to determine the defaults you will use as the basis for your system programming, including networking features. It also allows you to view these settings and change them, as required for your system requirements.
- System Coordinator Plus password — provides knowledgeable users with access to all but a few sensitive areas of programming. You should only distribute this password to experienced System Coordinators.
- System Coordinator password — allows an administrator responsible for the day-to-day operation privileges to view and change the settings that affect on-going operations.
- Basic password – provides a limited number of feature codes to change programming and control system services.

For information about programming using the System Coordinator and Basic passwords, see the *Modular ICS 7.0 System Coordinator Guide*.

The tables in this section provide an overview of what programming is seen by each type of user. For information about changing the passwords, see *Passwords* on page 412.

If you are new to programming, you may want to practice using the step-by-step programming instructions in the *Getting Started* section of the *Modular ICS 7.0 System Coordinator Guide* before attempting other programming.

Profile, Dialpad and Startup programming

Profile: [⚙] [*] [*] [P] [R] [O] [F] [I] [L] [E] (**7763453)

Dialpad: [⚙] [*] [*] [D] [I] [A] [L] [P] [A] [D] (**3425723)

Startup: [⚙] [*] [*] [S] [T] [A] [R] [T] [U] [P] (**7827887)

Default password: [C] [O] [N] [F] [I] [G] (266344)

Profile
Password: (CONFIG)
Region: PROF1 OK CHANGE

Dialpad
Password: (CONFIG)
QZ:0 CHANGE

Startup
Password: (CONFIG)
Reset Memory? YES
Template: CHANGE
Start DN: 2221 CHANGE
Applying Template (Install is complete when Date and Time appear on the display)

Installer or System Coordinator Plus programming

Entry code: [*] [*] [C] [O] [N] [F] [I] [G] (**266344)

Installer password: [C] [O] [N] [F] [I] [G] (266344)

System Coordinator Plus password: [S] [C] [P] [L] [U] [S] (727587)

Startup
- Template
- Start DN

Terminals&Sets
- Line access
- Capabilities
- Name
- User prefernces
- Restrictions
- Telco features

Lines
- Trunk/Line data
- Name
- Restrictions
- Telco features

Services
- Ringing service
- Restrn service
- Routing service
- Common settings

Sys speed dial

Passwords
- COS pswds
- Call log pswds
- Progrming pswds

Passwords (cont'd)
- Reg. pswd
- Hospitality
- SM Passwrd

Time&Date

System prgrming
- Hunt groups
- Change DNs
- Featr settings
- Direct-dial
- CAP/KIM assignment
- Dialing Plan
- Access codes
- Remote access
- Change DN type
- Companion
- Rec'd # length
- DN length
- BusName
- CbC limits
- Release reasons
- Hospitality
- Network Services
- SM sets

Telco features
- VMsg ctr tel#s
- ONN blocking

Software keys
- SysID
- Password keys

Hardware
- Cards on KSU
- Mod 03 - Mod 14 (depending on type of system)

Maintenance
- System version
- Port/DN status
- Module status
- Sys test log
- Sys admin log
- Network evt log
- Provisioning
- Tests
- CSU stats
- Diagnostic tools
- Link status

Usage metrics
- Hunt groups
- Call-by-Call

Dark gray items are seen only if you are using the Installer password. As well, some headings will not appear unless the

appropriate software code has been entered, for instance Network Services requires the PRI and MCDN software codes. Other settings will not appear unless the appropriate cards or trunks are assigned. CbC headings, for instance, do not appear unless the NI-2 protocol is used on the DTI trunk card.

Light gray areas are only available with MICS-XC software. These headings provide programming access for the Companion wireless setup.

System Coordinator programming

Entry code: [e] [*] [*] [C] [O] [N] [F] [I] [G] (**266344)

Default System Coordinator password: [A] [D] [M] [I] [N] (23646)

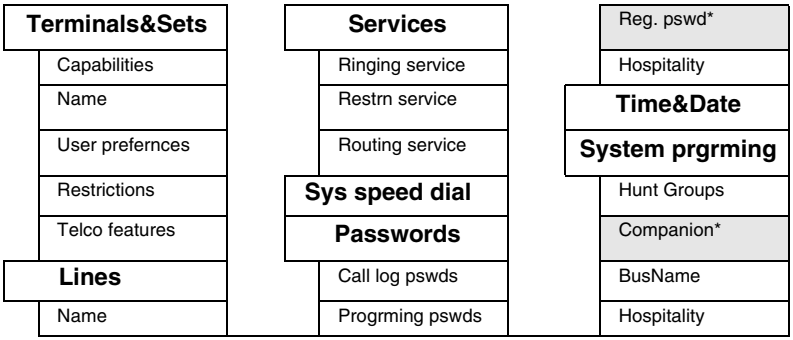

*These prompts only appear with XC software for Companion programming.

Admin/Basic programming

User code: [e] [*] [*] [U] [S] [E] [R] (**8737)

Default Basic password: B A S I C (22742)

Set ####	
Model	Dialing opt'ns
Button prgrming	Language
User speed dial	Display cntrst
Call log opt'ns	Ring Type

Programming tools

This section describes how to set up a telephone for system programming.

You will note that two different sheets of programming overlays came with your *Programming Record*. Use the one that was created for the telephone you plan to use to program your system.

You can use a two-line display telephone, such as a 7316E digital phone for programming. Use the appropriate overlay for the model of telephone you use, to help you understand where the programming navigation buttons are. The table below shows the Digital phone button icons. If you are programming with a Norstar legacy telephone, the icons may differ slightly:

Button description	7316/7316E
Feature	
Hold	
Volume Control	
Release	

The programming overlay

The programming overlay is a paper cutout that labels the four telephone buttons used during programming. Each telephone comes with the appropriate overlay. The 7316 and 7316E digital phone overlay looks the same but the programming buttons are located in different places on these telephones, as indicated in the figure below.

Digital telephone with overlay

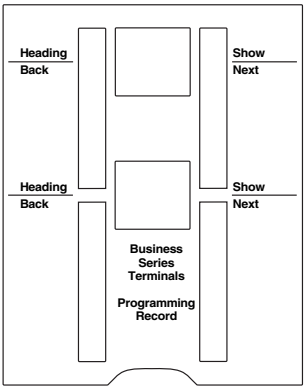

7316E programming set

7316 programming set

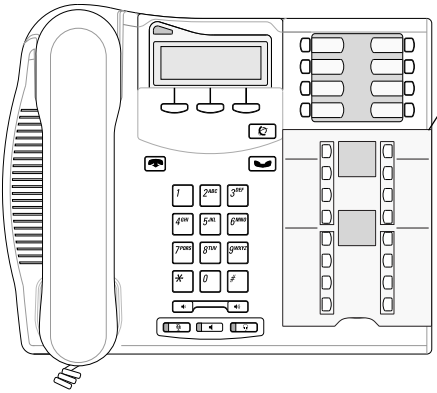

Overlay placed over keys with indicators

Using the telephone buttons for programming

On the overlay, each of the four programming buttons is assigned an action feature.

The indicators on the display beside the buttons show which buttons are active at each programming step. Press the appropriate button to move up or down through the Norstar programming menu.

The table below describes the action of each button.

Telephone overlay button definitions

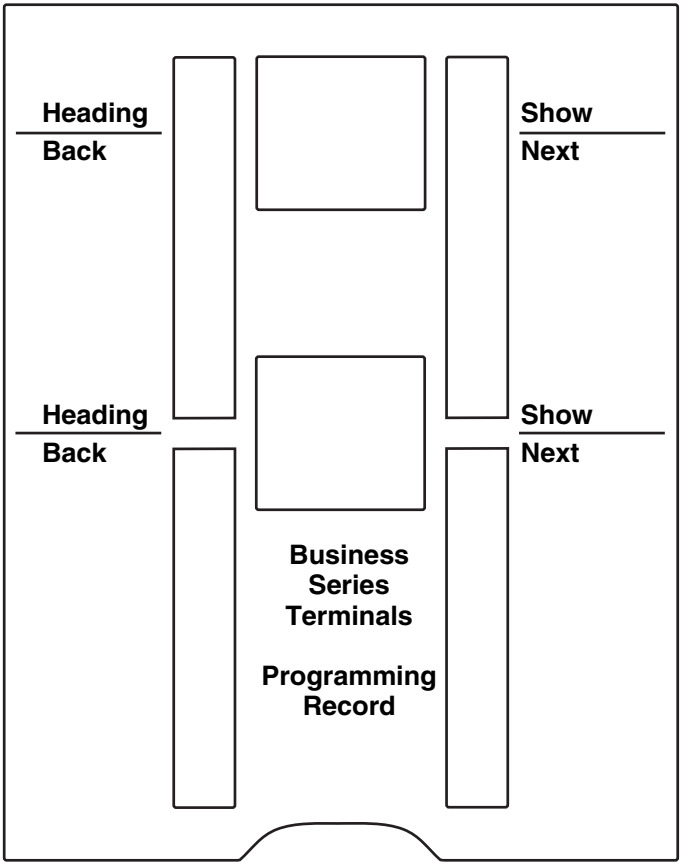

Heading	moves to a higher level in the hierarchy of headings and subheadings.
Show	moves to a lower level in the hierarchy of headings and subheadings, or begins programming for a heading or subheading.
Back	moves backward at the same level in the hierarchy of headings and subheadings.
Next	moves forward at the same level in the hierarchy of headings and subheadings.

Special characters on the display

When a heading ends with a triangle (▶), you can press [Show] to view the subheadings for that item.

When a heading ends with an ellipsis (...), you can press [Show] to see further information about that heading.

The display buttons

Display buttons on the telephones perform a number of functions, depending on where you are in programming. Up to three display button messages may be available at any time. Press the display button underneath the message for the function you want the system to perform.

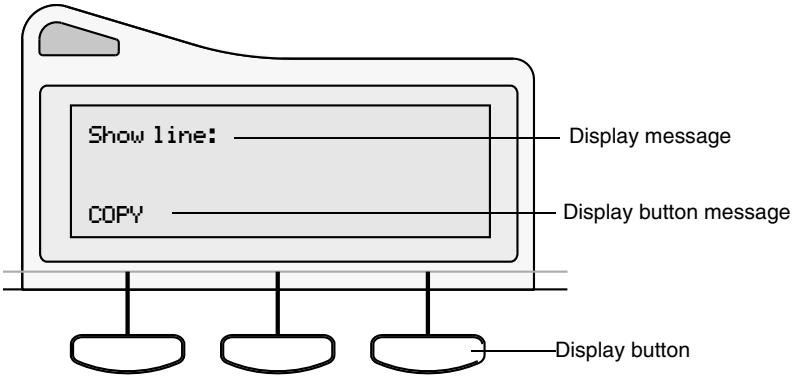

The most common display button labels are described in the following table:

Display button definitions

CHANGE	changes a programmable setting
BKSP	moves the cursor one space to the left (backspace) and deletes a character, allowing you to re-enter a number or letter
COPY	copies the settings of items like lines, telephones and filters to an item of the same type

FIND	allows you to enter specific code to go directly to a record
VIEW→	views the last part of a displayed message longer than 16 characters
←VIEW	views the first part of a displayed message longer than 16 characters
>	moves the cursor one position to the right when programming a name
<	moves the cursor one position to the left when programming a name
OK	confirms the change you made, or accepts the default, if you made no changes
ANY	Enters a wild card character that represents any digit between 1 and 9.

The Norstar Programming Record

The *Programming Record* can be used to help you plan your programming strategy. If you enter all your settings on the tables provided, you create a quick reference guide to your system.

Pages from the record may be photocopied, as necessary, for programming many telephones or lines. Additional Programming Records can also be ordered from your vendor.

Exiting

Norstar stores your changes automatically as soon as you alter any settings. If you changed something in error, you must re-enter the correct data.

In extreme situations, you may have to restart the system and reload with your backup material.

To exit the configuration interface, press [☎]. The display briefly reads End of session, then returns to the Date and Time display.

Viewing your programming updates

If any changes you made to programming have not taken effect yet, you will see an UPDATE display button when you leave programming. The display will show you how many telephones have not been updated yet because the system is busy with other programming or the telephone is in use.

Press DNs to see the specific telephones where programming changes have not been updated. Items will disappear from the list as they are updated, and UPDATE will disappear once all changes are complete.

Entering numbers

Numbers are entered from the telephone dialpad. The backspace display button may be used to edit the number.

A line number must always be entered as a three-digit number. Line numbers from 10 to 99 must be entered with a leading zero (line 020, for example). Similarly, line numbers less than 10 must be entered with two leading zeros (line 002, for example).

Internal telephone numbers, also referred to as directory numbers (DNs), can be from three to seven digits long. The default DN length is three. The DN length can be changed in programming.

Viewing long telephone numbers

External telephone numbers can be up to 24 digits, but the telephone display is only 16 character spaces long. To see a previously-programmed number that is longer than 16 digits, do the following:

Begin, for example, with 123456789012345…. The display shows only the first 15 digits. The three dots (…) at the end of

the display indicate that more digits remain to the external number.

1. To see the remaining digits, press VIEW→.
2. To see the first 15 digits again, press ←VIEW.

Setting up User Preferences

The User Preferences feature allows you to program memory buttons, speed dial codes, and other settings for any telephone on the system.

For example, an employee may want to have the Do Not Disturb feature programmed onto a memory button or create a speed dial code. Instead of programming from the target telephone, you can program these features from another telephone.

To set up user preferences, refer to *User prefernces* on page 348.

Copying telephone programming

Copying is done by using COPY under Terminals&Sets. You can copy programming from one telephone to another telephone, to a range of telephones, or to all telephones.

1. At Terminals&Sets ▶, press [Show].
2. Enter the internal number (DN) of the telephone from which you wish to copy programming.
3. Press COPY.
4. Select what programming will be copied:
   - SYSTEM – the system administration programming (system data) of a telephone

   OR

   - SYSTEM+USER – the system administration programming PLUS the programming for a particular telephone (user data)

   See the tables starting on page 318 to see which settings will and will not be copied with system and user data.

5. Press [Next], then press CHANGE to select the telephone or telephones which will be programmed with the copied data: SINGLE, RANGE, ALL.

   You can copy programming to telephones which are not yet hooked up to the system (unequipped).

6. Press [Next], then CHANGE to select which telephones will be programmed: Only equipped DNs, All set DNs. This is not necessary when copying to a single telephone.

7. Press [Next] and enter the internal number of the telephone that will be programmed or the internal numbers of the first and last telephone in a range.

8. Press OK to proceed with the copy.
   This step is not necessary when you are copying to a single telephone.

You can also use COPY to duplicate the settings found in the individual subheadings. The button is available in Line access, Capabilities, User prefernces, Restrictions and Telco features and will copy only the settings included in the subheading.

If you press COPY in one of these subheadings, you will not be asked to decide if user data will be copied. Otherwise, the procedure is the same.

Tips - *To copy to a group of telephones which are not part of a range, follow the steps for making a single copy and keep entering new numbers at the* Copy to: *display.*

Depending on the activities going on in the system, a copy may not take effect immediately. The brief display you see once you have finished a copying session does not indicate the process is complete.

You can leave the programming session even if the copy has not been completed. If you exit programming, the system continues copying, uninterrupted, until it is complete.

Event messages capture both the start and completion of the copying process. For more information, see Event messages on page 555.

Tips - *Some programming settings allow you to choose a delay according to the number of rings. The ring counts used are based on a North American standard of six seconds per ring cycle. The actual delay time may be different for a device other than a Norstar telephone.*

System Data that gets copied	System data that is NOT copied
Line access • Line assignment • Line pool access • Prime line designation • Number of intercom keys • Answer DNs (unless Answer button DN is same as telephone being copied to)	Line access • Private line appearances
Capabilities • Call Forward No Answer (DN + delay + setting) • Call Forward Busy (DN + setting) • DND on busy • Handsfree setting • Handsfree answerback • Pickup group • Paging zone • Paging • Direct-dial (which set is reached by the D-Dial digit) • Priority calling • Hotline • Auxiliary ringer • Allow redirect • Redirect ring • ATA settings (except Use ringback setting) • SWCA call group	Capabilities • Set name • Use ringback setting under ATA settings • SM Supervisor
Telco Features • Call Log set • 1stDisplay	Telco features • Log password • Log space
Restrictions • Set restrictions • Set lock • Allow Last Number Redial • Allow Saved Number Redial • Allow Link • Line/set restrictions	Direct-dial set designation (which set is the D-Dial set) CAP/KIM assignment ExtraDial set designation Service mode ringing set designation Prime set designation for a line Hunt group appearance

User data that gets copied	User data that is not copied if destination set type is the same as the source set type
Language choice Ring type Calls log options *(Auto logging)* Display contrast Dialing options (automatic, pre-dial, standard)	External autodial button assignments Internal autodial button assignments Programmable button assignments

Ring volume, User speed dial and CAP memory button programming on the modules are not copied with user data.

System ID

The System ID (or System Security number) can be accessed on a programming terminal display by pressing [✆] [*] [*] [S] [Y] [S] [I] [D] or [✆] [*] [*] [7] [9] [7] [4] [3].

Reviewing programmed settings

The Set Profile and Line Profile features help you to check your programming by allowing you to review the settings.

Programming that can be reviewed

Set Profile	Line Profile
Terminals&Sets settings	Lines settings
Set name	Line name
Line Access	Trunk data
Capabilities	Line data
Restrictions	Restrictions
Telco features	Telco features

Viewing the programming for a telephone

To display the programming for a telephone, follow these steps:

1. Press [✆] [*] [*] [S] [E] [T].
   The display reads Show set:.
2. Enter the internal number of the telephone you wish to review.
3. Use BACK, NEXT, and SHOW to navigate through the settings.
4. Press [☎] to exit.

Viewing the programming for a line

To view line programming for a telephone, follow these steps:

1. Press [✆] [*] [*] [L] [I] [N] [E].
   The display reads Show line:.
2. Enter the number of the line you wish to review.
3. Use BACK, NEXT, and SHOW to navigate through the settings.
4. Press [☎] to exit.

Programming sequence

The programming information in this guide is presented in the order that is useful for everyday changes and for upkeep of the system.

The following order of process is recommended as more suitable for an installation. However, the order in which you program your system will depend on a variety of variables and may differ from this list.

- Profile and Dialpad, if required (page 322 and page 326)
- Startup (initializes system) (page 327)
- Software keys for PRI and MCDN, if required. (page 492)
- Hardware (starting on page 495)
- Lines (including any networks) (starting on page 361)
- Terminals&Sets (starting on page 335)
- System prgrming (starting on page 420(
- Services (starting on page 381)
- Telco features (starting on page 487)
- Other software keys
- Sys speed dial (starting on page 411)
- Passwords (starting on page 412)
- Time&Date (starting on page page 419)
- customized programming, such as Voice Mail (refer to the documents for the specific application)

Profiles and Dialpads

Use Profile programming to determine which types of trunks are supported, and which are supported on and off core.

Use Dialpad programming to define how your system will handle the letters Q and Z from the dialpad.

You must perform this procedure BEFORE you run Startup, within the first 15 minutes after you plug in your KSU.

If you run this program after Startup, you will lose your settings.

Profile programming

If your system is outside of North America, you may require a slightly different operating profile for your system. You must choose these parameters before you perform your system startup programming.

If your system is in North America or you know that you want to run that profile, you do not need to run this program.

Profile parameters

Each market profile setting supports a different selection of trunk cards. In your situation you may require NI (primarily North America and some parts of South America) or ETSI (Europe, Asia, and some parts of South America) ISDN. Analog to digital expansion and compression rates can be either a-law or mu-law, as well. The tables in the following sections show which trunks are supported, and where.

Note: If you are unsure of the ISDN protocol or companding law active in your area, consult with your ISDN service provider for details.

Profile 1

This profile is the default profile. It supports cards and protocols for Canada and the United States. This profile has language support for English, Canadian French, and Spanish. The mu-law companding law is used in this profile. The off-core DTI module also is supported for this profile.

Profile 2

This profile is for international systems that use ETSI ISDN lines with aLaw. The languages supported include: English, French, Spanish, and Turkish.

Cards supported on-core	Cards supported off-core
• Analog • DTI • 4-port BRI-ST • 2-port BRI-ST • PRI (E1)	• Analog • E&M • 4-port BRI-ST • 2-port BRI-ST

Supported	Not supported
• ETSI MCDN (SL-1) and EURO protocols • aLaw companding law • Loops are provisioned • 7000 digital phone	• DID • UTAM

Profile 3

This profile provides language support in NA English, CDN French, US Spanish, and Turkey. This profile is for countries who use ETSI ISDN with mu-law (i.e. some Asian locations)

Cards supported on-core	Cards supported off-core
• Analog • T1 • 4-port BRI-ST • 2-port BRI-ST	• Analog • E&M • DID • 4-port BRI-ST • 2-port BRI-ST

Supported	Not supported
• ETSI ISDN protocol • muLaw companding law • Loops are provisioned • 7000 digital phone	• PRI • UTAM

Profile 4

This profile provides language support in English, French, and Spanish. This profile is for countries who use NI ISDN protocol with mu-law (i.e. some areas in the Caribbean). This profile also can support one off-core DTI module.

Cards supported on-core	Cards supported off-core
• Analog • T1 • PRI • 4-port BRI-ST • 2-port U • 4-port U • DTI	• Analog • E&M • DID • 4-port BRI-ST • 2-port U • 4-port U • DTI

Supported	Not supported
• NI ISD protocol • muLaw companding law • PRI, including MCDN • 7000 digital phone	• UTAM • Loops are not provisioned

Changing the profile

If your system is in North America or you know that you want to run the North American profile, you do not need to run this program.

If you need to change the profile, follow these steps:

1. Enter the Profile access code from a programming set by pressing [ ] [*] [*] [P] [R] [O] [F] [I] [L] [E] (**7763453).
2. Enter the password, when prompted.
   [C] [O] [N] [F] [I] [G] (266344)
   Region:PROF1 displays.
3. Press the key below CHANGE to scroll to another profile number.
4. Click the display key for OK when you reach the profile you want to choose.
5. Press [ ] to exit.

Dialpad programming

Use this program to determine how the system will recognize the characters Q and Z from a telephone dialpad. The two types of configurations are called CCITT and non-CCITT.

The default is non-CCITT, where Q and Z are accessed through the [0] dialpad button.

CCITT systems access these characters through the [7] (Q) and [9] (Z) dialpad buttons.

To change the setting, follow these steps:

1. Enter the Dialpad access code from a programming set by pressing [⚙] [*] [*] [D] [I] [A] [L] [P] [A] [D] (**3425723).
2. Q,Z:0 displays. To change it, press the key below CHANGE.
3. Press [☎] to exit.

Startup programming

After the hardware has been installed and powered up, use Startup to initialize the system, and select the system template that best suits your system.

Startup erases programming.

Startup erases any existing programmed data, and resets the system to factory defaults.

Tip - *Ensure that you have current backups of your system programming and logs.*

All programming is retained for three days if the power fails or if the Norstar system is powered off. After three days, it may be necessary to perform Startup.

Performing Startup

1. Enter the Startup access code from a programming set, by pressing [⌂] [*] [*] [S] [T] [A] [R] [T] [U] [P] which is the same as [⌂] [*] [*] [7] [8] [2] [7] [8] [8] [7].

   To be accepted, the Startup code must be entered no later than 15 minutes after the Norstar system has been powered up.

   If 15 minutes have elapsed since you powered up the system, turn system power off and on and wait for the system to power up again.

2. Enter the Installer password.
   The default is [C] [O] [N] [F] [I] [G] which is the same as [2] [6] [6] [3] [4] [4].

Tips - *The Installer password shown is the default normally used for Startup. For a system which has already been programmed, the Installer password might have been changed in programming and recorded in the Programming Record.*

Changing the default telephony template

After entering the Startup access code and Installer password the telephone displays Reset memory?.

1. Press YES to select a default telephony template. The display shows the current template.
2. Press CHANGE to choose the appropriate template.

Changing the template resets programming!

If you change your system template on an existing system, your programming will be reset to the defaults.

If this happens, perform an immediate restore from your backups.

Changing the starting DN

You can change the starting number for your telephone directory numbers (DNs). This is helpful when your system is part of a network and you want to use a uniform series of directory numbers for all telephones in your network.

With the display showing the current template.

1. Press [Next].

   The display shows the current start DN.

2. Press CHANGE.

3. Enter the new directory number you want as the starting DN, and press OK.

   The display shows the new range of DN numbers.

4. Press [Next] to store the programming.

   The display shows Applyng template.

This process takes a few minutes. When it is complete, the indicators begin to flash. When the set displays Jan 1 1:00 am. the initialization is complete.

The length of the directory number that you enter sets the length for all directory numbers. Target line received numbers are set to the same length when using the DID template. DNs can be from three to seven digits. If your system is part of a network, the DN length must be the same as all other systems.

A DN length change, if required, should be the first programming change on a newly-installed Norstar system.

Changing the DN length

If you reduce the length of the directory numbers in DN length *in* System prgrming*, the starting DN number is reset to the default value (***221***).*

If you increase the length of directory numbers in DN length *in* System prgrming*, each increase in length places the digit 2 in front of any existing DN. For example, if DN 3444 was increased to a length of 6, the new DN would be 223444.*

If the new DNs clash with the direct-dial digit, park prefix, or line pool codes or destination codes, those numbers are overridden and set to None.

Do not disable or enable ports in Maintenance programming during the first two minutes after Startup programming.

Programming

When Startup is complete, use programming to change default settings, as required. Use the programming record to orient yourself within the programming menus.

Programming for both MICS 7.0 and MICS-XC 7.0 has the following main headings:

Terminals&Sets	Allows you to assign settings to each telephone.
Lines	Allows you to assign settings to each trunk, external and target line.
Services	Allows you to create services such as night ringing, routing and restrictions for making external calls.
Sys speed dial	Allows you to create speed dial codes that can be used by any telephone in the system.
Passwords	Allows you to view and change passwords for programming and features.
Time&Date	Allows you to set the time and date on the system clock.
System prgrming	Allows you to change system-wide settings.
Telco features	Allows you to assign settings for external voice message services.
Software keys	Allows you to access system identification and password keys. Allows you to enter the software keys to activate PRI, Hospitality, or the Private Networking (MCDN) protocol

Hardware	Allows you to configure the Trunk Cartridges and BRI cards used by the system.
Maintenance	Allows you to view diagnostic information about the system and provision BRI cartridges.
Usage metrics	Provides statistical information about Hunt groups.

Entering programming for installers

1. Enter the installer codes on a programming set by pressing [✆] [*] [*] [C] [O] [N] [F] [I] [G],
   which is the same as [✆] [*] [*] [2] [6] [6] [3] [4] [4].

   The display shows Password:.

2. Enter the Installer password.

   The default password is **CONFIG** (266344).
   The display shows Terminals&Sets. Three triangular indicators ▶ appear on the vertical display between the rows of buttons.

3. Place the programming overlay over the buttons pointed to by the indicators ▶.

TIP - *7316 and 7316E digital phones look very similar. However, for programming, they have different sets of programming buttons, even though they use the same programming overlay. Once you enter programming, the indicators will make it clear which part of the overlay you need to use.*

Entering programming for system coordinators

The person on staff who is in charge of making changes on the Norstar system is called the system coordinator. The everyday programming done by system coordinators is described in the *Modular ICS 7.0 System Coordinator Guide*.

Some system coordinators need to be able to program more advanced settings and functions in order to carry out the day-to-day requests and upkeep of the Norstar. These coordinators are usually dedicated communications specialists who work with large Norstar systems or other telephone systems like PBX or Centrex.

By using a special password, a system coordinator can see and change many, but not all, of the programming settings used by an installer. In this guide, programming that can only be changed by an installer is marked in the heading. If you are programming using the System Coordinator plus password, you will not see these items when you move through the menus. This level of access is documented in the *Modular ICS 7.0 System Coordinator Guide*.

1. Enter the System Coordinator plus codes on a programming set by pressing
   [⚙] [*] [*] [C] [O] [N] [F] [I] [G], which is the same as
   [⚙] [*] [*] [2] [6] [6] [3] [4] [4].
   The display shows `Password:`.

2. Enter the System Coordinator plus password.
   The default password is **SCPLUS** (727587).
   The display shows `Terminals&Sets ▶`. Three triangular indicators ▶ appear on the vertical display between the rows of buttons.

3. Place the programming overlay over the buttons pointed to by the indicators ▶.

Entering programming using other passwords

A set of the most often-used headings and subheadings is available by using a System Coordinator password. Refer to page 307. This level of access is designed for the average user who takes care of the day-to-day changes to the Norstar system, but who is not interested in more advanced programming. The default password is **ADMIN** (23646).

There is also a Basic password that can be used to perform a few programming tasks. The default password is **BASIC** (22742). By using this password, a system coordinator can delegate some responsibilities, and at the same time, keep secure more sensitive programming features. For more information, refer to *Modular ICS 7.0 System Coordinator Guide*.

Terminals&Sets

Terminals&Sets allows you to assign settings to each telephone.

This is the first heading that appears after you enter your password.

1. Press [Show].

   The prompt displays: Show set:

2. Enter the set number of the telephone you would like to program.
3. Press COPY to duplicate the programming for the telephone and apply it to another telephone, a range of telephones or all the telephones on the system.

   For more information about copying set programming, refer to *Copying telephone programming* on page 316.

Line access

Line access allows you to assign lines to individual telephones. When you are finished programming Line access settings for one telephone, you can copy those settings to other telephones.

PRI lines can only be configured as direct inward dialing (DID) lines. Therefore, PRI lines are always Auto Answer and cannot be Manual Answer.

Tip - *When you assign line access for BRI loops which have only one SPID, make sure that the programming for the two lines on a BRI loop is identical. For example, if line 001 on BRI loop 201 appears at a DN, line 002 on the same loop should appear at the DN as well. See the ISDN chapter for more information about programming BRI lines.*

In general, auto-answer loop start trunks and auto-answer BRI trunks are not assigned to telephones. If assigned, they are used for monitoring incoming call usage, or for making outgoing calls.

Line assignment

This setting allows you to assign physical trunks and target lines to each telephone. Target lines are assigned and removed in the same manner as other lines.

1. After you have chosen a set number, press [Show] and enter the line number.
2. Press CHANGE to change the setting for each line to one of the following: Unassigned, Ring only, Appr&Ring, and Appr only.

Telephones that are grouped together, and that are assigned multiple target lines, can be set to allow ringing at all telephones simultaneously (Broadcast ring).

Appearances

This setting only applies for direct inward dial (DID) digits mapped onto target lines.

The Norstar system can handle simultaneous calls to a telephone with multiple target line appearances (157 to 284 for MICS, 157 to 380 for XC). The number of target line appearances depends on the line assignment setting, which include: Appr&Ring, Ring only, and Appr only.

If Appr&Ring or Appr only is chosen, you can have as many simultaneous DID calls as there are target line key appearances. If Ring only is chosen, you can have as many simultaneous DID calls as you have intercom keys.

> Users cannot access PRI lines directly through line appearances or line pools. All outgoing PRI calls are dialed through the intercom button, using destination codes.

When a trunk card is changed to PRI, all existing line appearances for that card are automatically removed.

Telephones without line buttons, telephones connected through an ATA2, portable telephones, and BRI ISDN S-terminals cannot process more than two simultaneous calls.

There is a suggested limit of four line keys per telephone. You can program more than four keys on a telephone by programming less than four on other telephones. For instance, you might program 20 keys on a receptionist telephone equipped with a CAP and only three keys on the 20 telephones connected to the CAP.

1. Enter the line number. The display shows the line number and its assignment.
2. Press [Show] until the display shows Appearances:1.
3. Press CHANGE and enter the number of target line appearances.
4. Press [☎] to exit or [Next] to continue programming.

Tips - *Press SCAN to view the lines assigned to this telephone.*

In general, auto-answer loop start trunks, auto-answer E&M trunks, and DID trunks are not assigned to telephones. If assigned, they are used for monitoring incoming call usage, or for making outgoing calls (auto-answer loop start and E&M trunks).

In general, fixed data channel trunks are not assigned to telephones. If assigned, they are used for monitoring call usage.

You cannot assign a line that is private to another telephone.

Each line assigned to appear at a telephone must appear at a button with an indicator on that telephone. The maximum number of line buttons are eight for the 7208 digital phone, 10 for the 7316 and 7316E digital phones.

If you set a line to Ring only, incoming calls appear on an intercom button.

The 7100, 7000 digital telephones and the Digital Mobility phones have no line buttons or intercom keys, but can be assigned any number of lines. However, only two calls can be received at a time. Ensure that the lines assigned to these telephones are assigned to ring; otherwise, you cannot detect incoming calls on the lines.

TIPs - *CAP line programming: A central answering position (CAP) with eKIMs, can provide extra line buttons if more than 10 (7316E digital phone) lines are assigned to the telephone attached to the modules. The extra lines automatically overflow onto the buttons on the module, as they are programmed. Note that new line assignments may overwrite existing programming on the eKIM.*

Note: The eKIM must be set up under System prgrmmg, CAP/KIM assgn *to accommodate line buttons. If the modules are not set up in system programming to be CAPs, the lines will remain assigned to the 7316E, but will not show up on a button on that telephone.*

Line pool access

This setting allows a telephone to access one or more of the 15 line pools available (A to O). When you assign a given line pool, the telephone being programmed can access any lines in that line pool.

Press [Show], then press [Next] to scroll through the settings and display the line pool you want to program access to. Press CHANGE to select the setting: **N** (No) and **Y** (Yes).

There can be a maximum of two on-core DTI cards (PRI) on a Norstar system, regardless of profile.

Four line pools are available for PRI lines for profiles 1 and 4, which support two on-core DTI cards and one off-core DTI card (*Off-core DTI card* on page 218). The four possible line pools are PRI-A, PRI-B, PRI-C, or PRI-D.

- Only PRI lines can belong to a PRI pool. PRI lines cannot belong to Line Pools A through O.
- All lines on a single DTI card (PRI) belong to the same pool.

- Lines from multiple DTI cards (PRI) can belong to the same pool if they are configured with the same protocol.
- PRI lines are assigned to pools with the `Line type` setting under Lines programming.

Prime line

This setting assigns a prime line to the telephone. A prime line is the first line that is automatically selected when the handset is lifted.

Press `CHANGE` to select one of these settings: `None`, `Pool` (A to O), or `I/C` (intercom). Only assigned lines and line pools appear.

PRI pools are not valid selections for a Prime line.

Tips - *An assigned prime line is not associated with the assignment of a prime telephone.*

- *An external line must be assigned to the telephone in Line assignment before it can be assigned as the prime line to the telephone.*
- *A line pool must be assigned to the telephone in line pool access before a line pool can be assigned as the prime line to the telephone.*
- *A target line cannot be a prime line for a telephone because it is incoming-only.*
- *A DID line should not be assigned as the prime line for a telephone. If assigned, it is treated as if no prime line has been assigned. The message* `Select a line` *appears when the receiver is lifted.*

Remember that if you set prime line to I/C (intercom), you may wish to assign loop start lines to the first line pools. When the system searches for an outgoing line, it begins at line pool A and chooses the first available line.

*By assigning a line pool as a prime line, a telephone can be made to search automatically for an idle line in a pool. This is described in the section on programming Line type (*Trk/Line Data*).*

Intercom keys

This setting assigns the number of intercom buttons to a telephone. Intercom buttons provide a telephone with access to internal lines and line pools.

Press CHANGE to select the setting: 0, 1, **2**, 3, 4, 5, 6, 7, or 8.

Tips - *Each intercom button assigned during programming automatically appears on the telephone. The buttons start with the lower right-hand button, or one button above, if the handsfree/mute feature is assigned to the telephone.*

A telephone needs two intercom buttons to be able to establish a conference call with two other Norstar telephones.

Only one intercom button may be required if the button will only be used to make and receive internal calls, and to access line pools.

Two intercom buttons are required if a telephone has several lines assigned to ring only.

The model 7000 and 7100 digital phones and the Digital Mobility phones default to two intercom positions. This allows the user to have two active calls at once, with one of them on Hold.These intercom assignments do not appear on buttons on the telephone.

Answer DNs

Calls for other system telephones can appear and/or ring and be answered at the telephone being programmed. The DNs of the other telephones are referred to as Answer DNs.

This is commonly used when twinning wireless handsets to allow mobile users to have one phone number that reaches them either at their desk or elsewhere within radio range.

1. Press [Show] and enter the Answer DN (the DN of the remote telephone).
2. Press CHANGE to change the setting for the Answer DN: Unassigned, Appr&Ring or Appr only.
3. To assign additional Answer DNs, press [Next], then enter the next Answer DN.

Answer DN notes:

- Press SCAN to view the Answer DNs assigned to this telephone.
- **Telephones with memory buttons:** Every Answer DN assigned to the telephone automatically assigns an Answer button with an indicator to the telephone, if they are available. These buttons should be labeled accordingly, identifying the telephone with its name or DN. **Autodial on idle:** If the Answer DN shows idle, the user can press the Answer DN button to autodial the remote telephone.
- If you assign Answer DNs to Digital Mobility phones, 7000 or 7100 digital phones, or other system telephones that do not have available buttons to support the Answer DN assignments, the Answer DNs must be set to Ring Only to allow proper alerting.

- You cannot assign Answer DNs to a single-line telephone connected to an analog module or to an Analog Terminal Adapter.
- The maximum number of Answer DNs is eight per telephone.
- More than one telephone can have an Answer button for the same DN. In this way, more than one telephone can provide call alerting and call answering for any calls directed to that DN.
- When a call to a system telephone is received via Call Forwarding, the Answer DN for that telephone will not alert.
- A private line does not generate alerting at an Answer DN.

OLI

Some ISDN devices may require the network Called Number digits, called the outgoing line identification (OLI), to be able to accept a call. The `OLI as called #` parameter, available only for Profile 1 and 4, permits the OLI digits to replace the internal DN digits of the ISDN device during call setup. To enable this capability, set the `OLI as called #` parameter to `Y` for all DNs used by the device.

1. At `Terminals&Sets`, press [Show] and enter the ISDN set number.

   The set displays 221:221.

2. Press [Show] twice to reach `Line Assignment`.
3. Press [Next] until the display shows `OLI#s`.
4. Press [Show]. The displays shows `OLI as called #:N`.
5. Press `CHANGE` to select `Y` to allow for OLI substitution.

6. Press the [☎] button to exit programming.

For PRI, the OLI# is based on the set number. However, when you make an outgoing call on a BRI line, the Call Display information which appears on the telephone you are calling is usually based on the first Network DN associated with the service profile identifier (SPID) and line.

If the SPID and line have more than one Network DN, you can program a DN to use a Network DN other than the first one for the outgoing Call Display information. When you program the alternate Network DN as the 10-digit OLI number, and you make a call using the line associated with the Network DN, the OLI number appears on the telephone you are calling.

If an outgoing call is made using a SPID and line that are not associated with the Network DN number used as the OLI number, the network ignores the number and the default Call Display information is displayed. This is the first or only Network DN associated with the SPID and line.

1. At `Terminals&Sets`, press [Show] and enter the ISDN set number.

   The set displays 221:221.

2. Press [Show] twice to reach `Line Assignment`.
3. Press [Next] until the display shows `OLI#s`.
4. Press `CHANGE` and enter the 10 digits used for the OLI.
5. Press `CLR` to choose `None`.

Note: If your system is equipped with a mixture of digital line cards, program the telephones to use line pools when making calls. If line pools are not properly configured, a telephone may use a line with a network range that does not include the calling line ID for the telephone,

causing the network to present an incorrect CLID to the called party.

Note: You can program PRI lines to block outgoing name and OLI. Refer to *Send Name Display (PRI)* on page 524.

Capabilities

Settings that control how the system interacts with individual telephones and the calls they receive are found under `Capabilities`. The following table lists these headings. The default settings are shown in bold.

Setting	Description	Options
Fwd no answer		
Fwd to	Redirect all incoming calls when this telephone does not answer.	Enter DN **None**
Forward delay	Select the number of rings before an unanswered call is forwarded.	2, 3, **4**, 6, 10
Fwd on busy	Redirect all incoming calls when this telephone is busy with another call.	Enter DN **None**
DND on Busy	Select whether an incoming call rings if the user is already on another call.	Y, **N**
Handsfree	Select whether handsfree will be available to a telephone.	Auto, Std (Standard), **None**
HF answerback	Select whether a user can automatically answer a voice call without lifting the receiver or pressing the handsfree/mute button.	**Y**, N
Pickup grp	Assign this telephone to a pickup group.	**None**, 1 to 9
Page zone	Assign this telephone to page zone.	None, **1** to 6
Paging	Select whether paging announcements can be made from this telephone.	**Y**, N
D-Dial	Select whether you can call the Direct-dial telephone from this telephone using the Direct-dial digit.	**Set1** to Set5, None

Setting	Description	Options
Priority call	Select whether to allow this telephone to interrupt calls or to override Do Not Disturb at another telephone.	Y, **N**
Hotline	Select whether a telephone number will be dialed automatically when a user lifts the receiver or presses the handsfree button.	Intrnl, Extrnl, **None**
Intrnl #	Appears if Hotline is Intrnl	Enter DN, **None**
Extrnl #	Appears if Hotline is Extrnl	**None**, <up to 24 digits>
<Extrnl> facility choice	Appears if Hotline is Extrnl and number is specified. `Use routing tabl` option routes numbers through the Routing Table. Target lines cannot be used as the facility.	Use Prime line Use line: Pool code: Use Routing tabl
Aux. ringer	Select whether an auxiliary ringer (if installed) will ring for incoming calls at this telephone.	Y, **N**
Allow redirect	Select whether to allow this telephone to redirect its lines.	Y, **N**
Redirect ring	Select whether a telephone rings briefly when a call on one of its lines is redirected by the Line Redirection feature ([✆] [8] [4]).	**Y**, N
ATA settings		
ATA ans timer	Select the length of delay between the last digit you dial and when the ATA device is ready to receive DTMF tone. To accommodate the device attached to the ATA, you may need to change the delay. If a modem or fax machine is attached to the ATA, you will want to keep the delay short. If a call to a fax machine or modem cannot be connected, try shortening the delay. If an individual is dialing the number for a fax machine or modem, you may want to make the delay a little longer.	3, 5, **7**, 10

Setting	Description	Options
ATA use	Select where the ATA can be used.	On site, **Off site**
MsgIndicate	Select the type of message indicator. When a message is received, Tone sends a Message Tone through the handset and Lamp turns on the Message Lamp.	**None**, Tone, Lamp
ATA dvc	Select the a device code for the telephone or terminal attached to your ATA. This feature enhances ATA telephone connects from an ATA over PRI/BRI lines.	**Telephon** Modem
Intrusion Protect lvl	Determine the level of access this telephone will have to allow the user to break into calls on other telephones in the system (Meridian 1 MCDN Break-in feature). To be able to use Break-in, the Protect lvl for this telephone must be less than that of the attendant telephone on the Meridian.	**None**, Low, Medium, High
SM Supervisor	Determine if this telephone will be allowed to monitor Hunt group calls.	**N**, Y
SWCA call group Call 1-16:	Add SWCA assignments to this telephone not associated with a button. **Note:** For telephones with memory buttons, you can add SWCA assignments under button programming.	**N**, Y

For more information, refer to the *Modular ICS 7.0 System Coordinator Guide*.

Name

The default name for a telephone is the DN, but it can be changed to any combination of letters and numbers to a maximum length of seven characters.

For more information, refer to the *Modular ICS 7.0 System Coordinator Guide*.

User prefernces

Any programming a user can do at a set can also be done through User prefernces. In the following table, the default settings are given in bold.

Setting	Description
Mdl	Allows you to pre-program the model of telephone which will use this DN.
Button prgrming	Allows you to program the buttons with internal and external autodialers and/or programmed feature keys.
User speed dial	Allows you to program user speed dialers (No defaults). (speed dial codes 256 to 279)
Call log opt'ns	Allows you to select how the telephone will log calls: Log all calls, No autologging, No one answered, or Unanswered by me.
Dialing opt'ns	Allows you to select how the system will dial for this telephone: Standard dial, Pre-dial or Automatic dial.
Language	Allows you to choose the language that will display on the set. The choices are based on the Profile chosen when the system was set up. Profile 1, 3 and 4: English, French or Spanish. Profile 2: English, French, Spanish or Turkish
Display cntrst	Allows you to adjust the contrast of the display 1, 2, 3, **4**, 5.....9
Ring type	Allows you to select a ring type **1**, 2, 3, 4

For more information, refer to the *Modular ICS 7.0 System Coordinator Guide*.

Restrictions

Restrictions prevent a user from making certain kinds of calls from a telephone or from lines that are available at the telephone. It also restricts some features.

When you are finished programming restriction settings for one telephone, you can copy those settings to other telephones by using COPY at the Restrictions ▶ display.

For ISDN PRI, all line restriction changes are applicable to all lines.

For more information about copying set programming, see *Copying telephone programming* on page 316.

Filters

Restriction filters group call restrictions and overrides in packages that allow you to make restriction assignments to lines and sets with just one package indicator.

In addition to restricting telephone numbers, you can prevent people from entering dialing sequences used by the public network to deliver special services and features. Some public network features provide the caller with dial tone after they have entered the special code, usually [#] or [*], so users may have an opportunity to bypass restrictions. To prevent this from happening, you should create filters that block these special codes.

You create a filter by defining the dialing sequences that are denied.

There will also be variations of each sequence that you will want users to be able to dial. Sequences that can be dialed are called overrides.

Once you create the filters, you can assign the restrictions to a telephone (Terminals&Sets), to a line (Lines), to a particular line on a telephone (Terminals&Sets), and to remote callers (Remote access).

1. Press [Show] and enter the number of the restriction filter you want to program, or press [Next] to move through all the available filters.
2. Press [Show] to see the first restriction in the filter. The first four digits of the number that will be denied are included in the display. The full number can be seen by pressing [Show] again.
3. Use ADD, the dialpad, and OK to program a restriction for each filter.
4. Press [Next] when the full restricted number is on the display (it shows Deny: and the number) to see any overrides to the restriction.
5. Use ADD, the dialpad, and OK to program overrides for each restriction filter.
6. Press ANY to enter a wild card character that represents any digit in a sequence of numbers when denying numbers or creating overrides.
7. You can press REMOVE to delete a restriction.
   The overrides will be deleted as well and the restrictions will renumber to fill the gap.

Default filters

Filter 00 permits unrestricted dialing and cannot be changed.

Filter 01 is pre-programmed with five restrictions and some associated overrides.

In Filter 01, restriction 02 and override 005 allow long distance directory assistance calls. Filter 01 reflects the fact that area codes can now have any digit as a second digit. This is designed to be used with the North American dialing plan.

The dialing string 911, the number for emergency assistance in North America, is included as both a restriction and an override in filter 01. This arrangement prevents anyone from blocking calls for emergency assistance on lines or sets using the default filter.

The following table lists the initial defaults for restriction filters.

Restriction filter defaults

Filter	Restrictions (denied)	Overrides
00	Unrestricted dialing	
01	01: 0	
	02: 1	001: 1800 002: 1877 003: 1888
	03: 911	001: 911
	04: 9411	
	05: 976	
	06: 1976	
	07: 1•••976	
	08: 1900	
	09: 1•••900	
	10: 5551212	
02 - 99	No restrictions or exceptions programmed	

Note: Default filters are only loaded at a cold start.

Filters 02, 03, and 04, although not preset with restrictions and overrides, are used as default filters in these programming headings:

Filter	Heading	Sub-heading
02	Terminals&Sets	Set restrns:
03	Lines	Line restrn:
04	Lines	Remote restrn:

Tips - *Filter 00 cannot be changed.*

Norstar can have up to 100 restriction filters (00 to 99).

Each programmable filter can have up to 48 restrictions. There is no limit on the number of overrides that can be allocated to a restriction.

There is a maximum of 400 restrictions and overrides allocated to the 100 programmable filters.

The maximum length of a restriction is 15 digits. The maximum length of an override is 16 digits.

A single dot (•) in a dialing sequence is a wild card (stands for any digit). It is inserted by pressing ANY.

You can use [*] and [#] in a sequence of numbers in either a restriction or an override. These characters are often used as part of feature codes for other systems or for features provided by the central office (the public network).

*When restricting the dialing of a central office feature code, remember to create separate restrictions for the codes used for DTMF and pulse lines. Examples of dialing strings that may be restricted for this reason are *67 and 1167. Do not string together a central office feature code and a dialing sequence that you want to restrict. Create a separate restriction for each.*

You can use COPY and the dialpad to copy restrictions and overrides from one filter to another.

Any restriction or override can be used in any number of filters. Each time it is used, it counts as one entry. For example, if restriction 411 exists in filters 01, 02 and 03, it uses up three entries of the 400 entries available.

Removing a restriction from a filter has no effect on the contents of other filters, even if the restriction was copied to them.

You cannot delete a filter. Removing the restrictions programmed on a filter makes it an unrestricted filter, but the filter itself is not removed.

Removing a restriction changes the identifying number of the restriction.

Removing a restriction also removes the overrides associated with it, and changes the identifying number of the restriction. For example, if you remove restriction 01, restrictions 02 to 08 are renumbered as 01 to 07.

Set restrns

Use this heading to assign a restriction filter to a telephone to prevent certain numbers from being dialed from that telephone. You can also use set restrictions to prevent certain features from being used by a telephone.

Filters

You can assign a different restriction filter for normal service and for each of the six schedules. Refer to *Services* on page 381 for more information about the schedules.

Use [Show], CHANGE and the dialpad to enter the number of the restriction filter to be assigned to the set for each schedule.

The following table displays the default set filters.

Default filters for sets

Schedule	Restriction filter
Normal	02
Sched 1 (Night)	11
Sched 2 (Evening)	12
Sched 3 (Lunch)	13

Schedule	Restriction filter
Sched 4	00
Sched 5	00
Sched 6	00

Based on the defaults, if you enter a set of restrictions for filter 11, they will be automatically applied when the Night schedule is in use.

Set lock

You can adjust the amount of personal programming and customizing that can be performed at a telephone.

Press CHANGE to select a set lock level of: None, Partial, or Full.

Allow last no

A telephone can be prevented from using Last Number Redial ([ ] [5]).

Press CHANGE to select the setting: Y (Yes) or N (No).

Allow saved no

A telephone can be prevented from using Saved Number Redial ([ ] [6] [7]).

Press CHANGE to select the setting: Y (Yes) or N (No).

Allow link

A telephone can be prevented from using Link ([ ] [7] [1]), an option that allows a caller to connect to an outside PBX.

Press CHANGE to select the setting: Y (Yes) or N (No).

For more information about host system signaling, refer to the *Modular ICS 7.0 System Coordinator Guide*.

Line/set restrns

Line/set restrns allows you to assign a restriction filter to a specific line that can be used for outgoing calls at a specific telephone. This type of filter replaces any line or set restriction filters which might otherwise apply. It restricts the numbers you can dial on a line, but only from that telephone. The same line on another telephone can have different restrictions.

As with set restrictions, you can apply a different line/set restriction for normal service and for each of six schedules.

Use [Show], CHANGE and the dialpad to enter the number of the filter to be assigned as the line/set restriction for each schedule. There are no default line/set restrictions.

Tips - *A maximum of 255 line/set restrictions may be applied to lines at telephones.*

If a line/set restriction is assigned to a line at a particular telephone, it overrides any line restrictions or set restrictions which might otherwise apply.

If no line/set restrictions have been defined, the numbers are checked against the set restrictions and the line restrictions, if either of these have been defined. The numbers may be rejected by either restriction.

Telco features

Telco features can program the way the Norstar works with features and services that are based in the public network or other outside source. Norstar is designed to work with two of these kinds of services: Call Display and an external voice message service.

When you are finished programming Telco features settings for one telephone, you can copy those settings to other telephones by using COPY at the Telco features... display. For more information about copying set programming, see *Copying telephone programming* on page 316.

Feature assignment (CLID alignment)

If you subscribe to Call Display (Caller ID) services, external calls are identified on the display of telephones which have been programmed to display CLID. You may also have a message indicator from an external voice mail service show on the display. Feature assignment programming allows you to customize how this information is used.

Press [Show] and enter the number of the line you want to program with feature settings for the telephone.

Caller ID set

Caller ID set allows you to specify if a telephone displays the Call Display information when a call is ringing on an external line. After the call is answered, Call Display information is always shown at the telephone that answered the call.

The Caller ID set for target lines is the same telephone that has appearance on that target line. Press CHANGE to select the setting: N (No) or Y (Yes).

Tip - *In order for a telephone to display the Call Display information for calls on an external line, it must also be programmed to appear and ring or ring for that line.*

For systems that subscribe to Call Display services, Caller ID can be viewed on any telephone by entering the Call Information feature code [*] [8] [1] [1]. See the Telephone Feature Card or Modular ICS 7.0 System Coordinator Guide for more information.

Call information does not automatically appear when the telephone has an Answer DN, or belongs to a Ring group activated by Ringing Service. Call information is still available for these calls by pressing [*] [8] [1] [1].

Call log set

When you choose the Line variable for Call log under Featr settings (*Call log* on page 436), you can use this heading to determine which lines will log calls. The assigned lines do not have to be ringing lines, but they must have an appearance on the telephone.

For each assigned line, press CHANGE to select the setting: N (No) or Y (Yes).

Extl VMsg set

If you subscribe to an external voice message service or central voice mail system that is not directly connected to your ICS, you can access that service through your Norstar system. The external voice message setting controls where the indicator shows up when there is a voice message waiting on a particular line. The line must be assigned to appear on that telephone.

Press CHANGE to select the setting: N (No) or Y (Yes).

To find out if your voice message service will work with Norstar, or if you have any problems with your service, contact your voice message service provider.

1stDisplay

Depending on the services you subscribe to, Call Display information may contain the number of the caller, the name of the line in your Norstar system that the call is on, or both. For each telephone, you can determine which information is displayed first.

Press CHANGE to select the setting: Name, Numbr or Line.

Tips - *The Call Information feature is used to display and toggle between the name and line number used for Call Display information. Refer to Modular ICS 7.0 System Coordinator Guide for more information.*

You may see Unknown number *on the display if the information is not available from your telephone company. You may see* Private number *on the display if the caller blocks that information.*

Called ID

Called ID allows you to see the extension number and name of the set being called on the display. The Called ID set for target lines is the same telephone that has appearance on that target line.

Press CHANGE to select the setting: N (No) or Y (Yes).

Log space

Log space determines the number of items that can be stored in the Call log for each telephone.

Use [Show], ADD and REMOVE to redistribute the log space. There is no log space assigned by default.

Tips - *There must be space available in the log pool in order for you to add space to a Call log. The maximum number of spaces available is 600.*

System-wide log space allocation is performed in Call log space under System prgrming*. If you want to allocate the same log space to all telephones, use the Call log space setting instead.*

Lines

This chapter describes the settings that allow you to determine how the lines coming in and going out of the system will be assigned.

Lines, whether physical or virtual, are the connecting threads that allow users access into and out of the Norstar system to the public network or to other private networks.

Lines can be pooled so a number of telephones have access to more available lines, or they can be assigned specifically to one telephone. There are also a number of ways that a telephone can be configured to access line pools and special lines like tie lines and private network lines.

Trunk/Line data

Installer password required

Trunk data allows you to program settings for lines that affect how Norstar communicates with other switches. These settings also allow you to determine how lines, including target lines, will be used in the Norstar system.

Some Trunk data settings may not appear on the display during programming, depending on the type of trunk. Those that appear for a given Trunk type are indicated in the following table.

Trunk/Line data settings that appear for a given trunk type

Setting	Loop start Analog	Loop start Digital	E&M Analog	DID Analog	DID Digital	Target lines	PRI lines	BRI -ST BRI-U2 BRI-U4	Groundstart (T1)	E&M Digital	Fixed
Trunk type	✓	✓	✓	✓	✓	✓	✓	✓	✓	✓	✓
Line type	✓	✓	✓	✓	✓	✓	✓	✓	✓	✓	–
Dial mode	✓	✓	✓	✓	✓	–	–	–	✓	✓	–
Rec'd #	–	–	–	–	–	✓	–	–	–	–	–
If busy	–	–	–	–	–	✓	–	–	–	–	–
PrimeSet	✓	✓	✓	✓	✓	✓	✓	✓	✓	✓	–
Auto privacy	✓	✓	✓	✓	✓	–	–	✓	✓	✓	–
Trunk mode	✓	✓	–	–	–	–	–	–	–	–	–
Ans mode	✓	✓	✓	✓	–	–	–	✓	✓	✓	–
Ans with DISA	✓	✓	✓	–	–	–	–	✓	✓	✓	–
Link at CO	✓	–	–	✓	–	–	–	–	–	–	–
Aux. ringer	✓	✓	✓	✓	✓	✓	–	✓	✓	✓	–
Full AutoHold	✓	✓	–	–	–	–	–	✓	–	–	–
LossPkg	✓	–	–	–	–	–	–	–	–	–	–
Signal	–	–	✓	✓	✓	–	–	–	–	✓	–
ANI Number	–	–	✓	✓	✓	–	–	–	–	✓	–
DNIS Number	–	–	✓	✓	✓	–	–	–	–	✓	–
Gain	–	–	✓	✓	–	–	–	–	–	–	–

Copying Trunk and Line data

At the Trk/Line data display COPY appears. This allows you to copy programming from one line to other lines.

Tips - *In copying data from a physical trunk to a target line, or the other way around, only the data in common is copied. For example, copying a target line to an E&M trunk copies only the Line data settings because there are no Trunk data settings for a target line.*

You cannot copy programming between lines on different types of Trunk Cartridges. If you try to copy line programming between lines on different types of Trunk Cartridges, the display shows Incompatible Cd*, then returns to* Show line: _

The Received number of a target line is a unique number and cannot be copied.

Trunk type

The Trunk type heading shows Loop, DID, PRI, BRI-ST, BRI-U4, BRI-U2, E&M, Ground or Fixed.

You can only change this setting for lines connected to a DTI. For all other lines, such as analog lines and BRI lines, the trunk type is determined by the Trunk Cartridge type. The system simply displays the trunk type; you cannot change it. To change the Trunk Cartridge or BRI Card, see *Hardware* on page 495.

Changing the settings for a trunk type on a system that is in use, may cause calls to be dropped.

Enable Trunk Cartridges

If you disabled any Trunk Cartridges to perform programming, enable them now using `Module status` under `Maintenance` or your system will not function properly. See *Module status on page 537* for information about enabling Trunk Cartridges in Module status.

Line type

This setting specifies how the line is to be used in relation to other lines in the system.

Press `CHANGE` to select the setting: `Public`, `Private to:`, or `Pool` (A to O or PRI-A to PRI-D).

- A **Public** line can be accessed by more than one telephone.
- A **Private** line can be assigned only to one telephone and the prime telephone for that line. Use `CHANGE` and the dialpad to enter the internal number of the telephone.
- **Pool** assigns the line to one of the line pools. If a line is assigned to a line pool, but is not assigned to any telephone, that line is available only for outgoing calls (for example, PRI lines).

Tips - *Line pools must never contain a mixture of loop start lines and E&M lines. All E&M lines in a given line pool should go to the same location.*

Try to avoid putting unsupervised loopstart lines in a line pool. These lines can become hung, especially when a remote user uses the line pool to make an external call.

There are two more programming settings that must be assigned before a line pool can be used:

- You must assign line pool access to telephones in Line access programming.
- You must assign system-wide line pool access codes in System prgrming for line pools A to 0, and/or routes and destination codes. PRI line pools can only be accessed by being assigned to routes and destination codes.

Tips - *A telephone can be administered to search automatically for an idle line from several lines appearing on the telephone. Assign a line pool as the prime line (in* Line access*) and all the lines in the line pool must appear on that telephone.*

When the user lifts the receiver or presses the handsfree button, any one of the lines, if idle, can be selected by Automatic Outgoing Line selection.

This is not available for PRI line pools.

Line connected to a DTI

The Line setting shows the trunk type for a line.

For lines connected to a DTI, press CHANGE to select one of these settings: Loop, E&M, DID, Ground, Fixed, PRI.

- Loop is used for loop start trunks
- E&M is used for the first two line numbers on E&M trunks

Tips - *E&M Trunk Cartridges have two E&M lines and two DTMF receivers (instead of four lines, as in a Loop Start Trunk Cartridge). For example, if an E&M Trunk Cartridge has the range of line numbers 049 to 052, numbers 049 and 050 are E&M lines, and numbers 051 and 052 are the DTMF receivers. The display for line 050 appears as* Line050:E&M *and for line 051 appears as* Line051:DTMF.

- DID is used for direct inward dialing trunks
- ground is used for groundstart (T1) trunks
- PRI is used for ISDN-PRI, which includes the SL-1 MCDN protocol for networking.

Tips - *Changing the settings for a trunk type on a system that is in use, may cause calls to be dropped.*

When assigning lines to line pools, consider your network configuration. You may be able to create a unified dialing plan by assigning lines to the same location to the same line pool on each of your systems. For example, if system A and system B each have tie lines to system C, assign the tie lines to pool D on each of the systems.

If you plan to program the prime line as I/C (intercom) for some telephones, you may wish to assign loop start lines to the first line pool. Remember that when the system searches for an outgoing line, it begins at line pool A and chooses the first available line.

Assigning a single E&M trunk to a line pool allows features like Ring Again to help manage access to a shared resource.

You cannot assign target lines (157-248/380) to a line pool.

Dial mode

Dial mode allows you to specify whether dual tone multifrequency (DTMF) or pulse signaling is used on the trunk.

Press CHANGE to select the setting: Tone or Pulse.

Tips - *For DID and E&M lines connected to a DTI, the Tone setting does not appear if Signal is Immediate.*

Rec'd

The Received number setting applies only to target lines. Target lines are: 157 to 248 for systems running MICS version 7.0 and newer software, and 157 to 380 for systems running MICS-XC version 7.0 and newer software. It allows you to specify the digits which make a specific target line ring. The default value is **None**.

Use CHANGE, and the dialpad to program the digit string for each target line.

Tips - *A Received number can be from three to seven digits long. It is programmed under System prgming. The default length is three for all systems.*

A received number cannot be the same as, or be the start digits of a line pool access code, a destination code, the DISA DN or the Auto DN.

If you are configuring auto-answer BRI trunks to map to target lines, the received number should be the same as the Network DN supplied by your service provider. The call will be directed to the prime telephone for the incoming line if the Network DN is not used.

If busy

When a call is received on a target line that is already busy, you can choose if the caller gets a busy tone or if the call is forwarded to the prime set.

Busy tone only works for PRI and BRI trunks on target lines.

Programming is done in Trunk/Line Data under Lines. Press CHANGE to select one of these settings: To prime or BusyTone.

Prime set

This feature allows you to assign a telephone to provide backup answering for calls on the line. Unanswered calls are redirected to the prime telephone.

Use CHANGE and the dialpad to enter the internal number of the prime telephone.

The default prime set for each line on a system with three-digit DNs is 221.

Tips - *For auto-answer trunks, calls ring only at the prime telephone for a trunk, and only when overflow call routing is active.*

Each line can be assigned only one prime telephone.

Auto privacy

This feature controls whether one Norstar user can select a line in use at another telephone to join an existing call. The default setting is Privacy on, so that nobody with a Norstar telephone can press a line appearance on their telephone to join a call in progress at another telephone.

Press CHANGE to select either: Y (on) or N (off).

Tips - *Users can change a line privacy setting for an individual call using the Privacy feature (* [*] [8] [3] *).*

Note: This feature does not work on target lines or PRI lines.

Trunk mode

Trunk mode allows you to specify either disconnect supervision or unsupervised. Disconnect supervision, also referred to as loop supervision, releases an external line when an open switch interval (OSI) is detected during a call on that line. This prevents the line from remaining unavailable for other Norstar users.

Press CHANGE to select the setting: Unspr or Super.

- Unspr (the default) turns disconnect supervision off for the line.
- Super assigns supervised mode, if supported by the line. otherwise, the line functions as unsupervised.

Tips - *The duration of an open switch interval (OSI) before Norstar disconnects a call is programmed by the* Discon timer *setting under* Hardware.

Disconnect supervision is required for loop start trunks to operate in auto-answer mode or with DISA. It is also required to conference with two external callers. The line must be equipped with disconnect supervision from the central office for the Super *option to work.*

Ans mode

The Answer mode setting appears on the display during programming for loop start and BRI lines with a Trunk mode setting of Super, for groundstart (T1) lines, and for E&M lines. Press CHANGE to select the setting: Manual or Auto.

Tips - *If loop start lines are set to* Auto*, you will require an E&M card for the DTMF receivers to function properly.*

Tips - *Remember that disconnect supervision is required if loop start trunks need to operate in auto-answer mode.*

You should change the Answer with DISA setting to N *for E&M trunks in a private network operating in auto-answer mode. The default,* Y *(Yes), causes the system to expect a Class of Service password after it automatically answers a trunk.*

Ans with DISA

When activated, the Answer with DISA setting specifies that a trunk is answered with stutter dial tone. This feature is only active if Ans Mode is set to Auto.

Press CHANGE to select the setting: Y (Yes) or N (No).

Tips - *For loop start and E&M lines this setting only appears if* Answer mode *is* Auto.

Set Ans with DISA *to* No *for E&M lines on an enhanced switched network (ESN) to operate properly in auto-answer mode.*

Tips - *When an incoming call comes in on an auto-answer loop guarded or Earth calling line that is not configured to answer with DISA, the caller hears system dial tone. They can then enter a DID line public received number to dial direct to an extension, a line pool access code to break out, or a remote feature code from a DTMF telephone if a suitable remote access package has been assigned.*

To program DISA on PRI trunk, see *Programming Direct Inward System Access (DISA) on PRI trunks* on page 82.

Link at CO (loop trunks only)

Some exchanges respond to a Link signal ([*] [7] [1]) by providing an alternative line for making outgoing calls.

- When Link at CO is set to Y (Yes), the system applies the restrictions on outgoing calls to the digits dialed after the Link signal, and the call on the alternative line will be subject to all restrictions.
- Setting Link at CO to N (No) prevents a Link signal from resetting the Norstar restrictions in cases where the host exchange does not provide an alternative line.

Press CHANGE to select the setting: Y (Yes) or N (No).

For more information about host signaling options, refer to *Modular ICS 7.0 System Coordinator Guide*.

Aux. ringer

This setting allows you to turn the auxiliary ringer on or off. An auxiliary ringer can be programmed on a line or a telephone. When programmed on a telephone, the auxiliary ringer rings every time a call is received. When programmed on a line, the auxiliary ringer does not ring when a transferred call is received.

Press CHANGE to select the setting: Y (Yes) or N (No).

Tips - *The auxiliary ringer is an optional device that should be connected by the installer.*

If you have an auxiliary ringer programmed to ring for calls on an external line, and you transfer a call on that line without announcing the transfer, the auxiliary ringer will ring for the call transfer.

Tips - *An auxiliary ringer can also be programmed in* Services *to ring for a line placed into a scheduled Ringing service. See the Modular ICS 7.0 System Coordinator Guide for more information.*

Full AutoHold

Full AutoHold on idle line is a variation of the Automatic Hold feature. If you select an idle line, but do not dial any digits, that line is automatically placed on hold if you select another line.

Press CHANGE to select the setting: N (No) or Y (Yes).

The line you first selected is held until you press the line button. The line is not available for use by anyone else.

Tips - *The Full AutoHold setting appears only during loop start trunk programming. Full AutoHold is always in place for E&M trunks, but it has no meaning for incoming-only DID trunks. Only change the default setting if Full AutoHold is required for a specific application.*

LossPkg

Loss Package allows you to select the appropriate loss/gain and impedance settings for each line. The setting is based on the distance between the ICS and the terminating switch, and the terminating switch type. When measuring the distance from ICS to CO and from ICS to PBX, use 600 ohms as the termination resistance setting.

A loss of 4 dB corresponds to a cable length of approximately 2700 m (9000 ft.).

Press CHANGE to select one of the following settings.

The following table describes the five types of loss packages.

Loss Pkg	Receive Loss	Transmit Loss	Impedance	Distance to switch/ cable loss/terminating switch
ShortCO	0 dB	3 dB	Short	Short/<2 dB/ICS to CO
MediumCO	0 dB	0 dB	TIA/EIA 464	Medium/>2 dB and <6 dB/ ICS to CO
LongCO	-3 dB	0 dB	TIA/EIA 464	Long/>6 dB/ICS to CO
ShortPBX	0 dB	0 dB	Short	Short/<2 dB/ICS to PBX
LongPBX	-3 dB	0 dB	TIA/EIA 464	Long/>2 dB/ICS to PBX

Tips - *This setting applies only to lines connected to an NT7B75GA-93 Loop Start Trunk Cartridge.*

When measuring the distance from ICS to CO and ICS to PBX, use 600 ohms as the termination resistance setting.

Signal

Select the signal type for the line.

Press CHANGE to select one of these settings: WinkStart, Immediate, DelayDial.

Tips - *The Signal setting appears on the display only for E&M or DID lines.*

Make sure that this matches the signal type programmed for the trunk at the other switch.

For E&M and DID lines connected to a DTI, the Immediate *setting does not appear if dial mode for the line is set to* Tone.

ANI Number

Select whether the telephone number of the caller will be collected for this line. The digits can then be displayed on Norstar telephones as part of Call Display services.

Press CHANGE to select either: N (No) or Y (Yes).

Tips - *The central office must deliver ANI/DNIS in DTMF mode. The delivery of ANI/DNIS depends on the network provider and the services they offer. This setting applies only to E&M and DID lines.*

For E&M or DID lines connected to a DTI, the setting only appears if Signal *is* WinkStart*. For lines connected to an E&M or DID Trunk Cartridge, the setting only appears if* Signal *is* WinkStart *or* Immediate*.*

If the conditions for signaling mode and start arrangement are not met, prompts are not presented to the user. No additional equipment is required.

DNIS Number

Select whether the digits dialed by an external caller on this line will be collected.

Press CHANGE to select either: N (No) or Y (Yes).

Tips - *This setting applies to E&M lines only.*

For E&M lines connected to a DTI, this setting only appears if Signal *is* WinkStart *and* Ans mode *is set to* Manual*. For E&M lines connected to an E&M Trunk Cartridge, this setting only appears if* Signal *is* WinkStart *or* Immediate *and* Ans mode *is set to* Manual*.*

These digits are required for some third-party software applications.

Gain

Select the appropriate gain level for the line.

Press CHANGE to select either: Normal or High.

The default value Normal induces zero loss. Use it when the E&M trunks are connected to facilities that present 0 dBm at the interface for both the transmit and receive paths.

Normal gain level (0dBm)

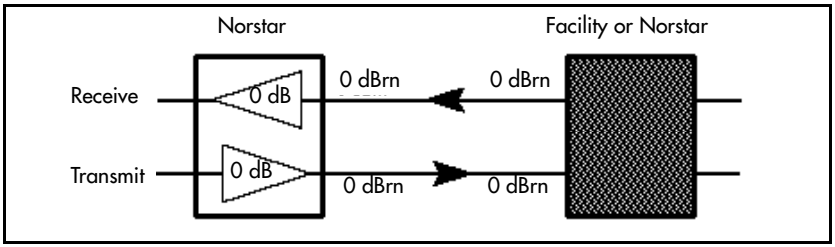

The value High induces 7 dB of loss in the receive path and 16 dB of loss in the transmit path. Use it when the E&M trunks are connected to facilities that present +7 dBm in the receive path and -16 dBm in the transmit path at the interface.

High gain levels

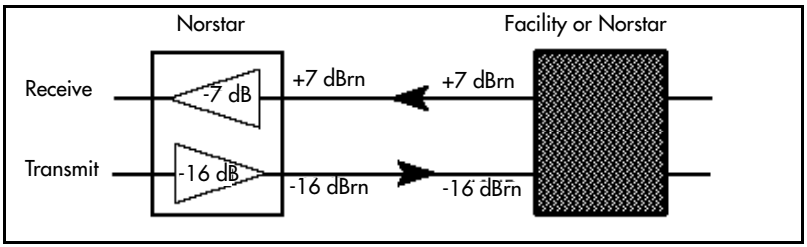

Tip - *Control over the gain on transmission levels can only be set for lines on E&M Trunk Cartridges.*

Programming distinctive ring patterns

When lines are configured on your system, they can be assigned one of four distinctive ring patterns (DRP). The default for all telephones is **1**. The default for lines is None, which is the lowest priority.

Call ringing: When multiple calls are presented to the telephone, the call with the highest priority DRP setting will be the call that rings at the telephone.

Call answering: When multiple calls are presented to a telephone, and the user picks up the handset, the call with the highest priority DRP setting is the call that is presented.

TIPs - *External calls always have a higher priority than internal calls.*

If the ring type is changed on a telephone after the DRPs are set on the line, the line DRPs are overwritten by the telephone settings.
If the line DRPs are set after telephone programming, then the telephone ring programming is overridden by the DRP. Refer to the Modular ICS System Administrator Guide for details about setting ring types on a telephone.
If Hunt group DRP has a higher priority than the line DRP, the system will use the Hunt Group DRP within the Hunt Group. (Refer to Allowing/disallowing an auxiliary ringer on page 427.)

Note: Digital Mobility phones do not have access to this feature.

1. Place the programming overlay over the appropriate keys on your programming telephone.
2. Press [ ] [*] [*] [2] [6] [6] [3] [4] [4] (CONFIG). The display shows `Password:`.
3. Press [2] [6] [6] [3] [4] [4] (CONFIG). The display shows `Terminals&Sets`.
4. Press [Next] until the display shows `Lines`.
5. Press [Show]. The display shows `Show line __`.
6. Press `FIND` until you reach the line to which you want to define a ring pattern.
7. Press [Show] and then [Next] until the display shows `TrunkType:PRI`.
8. Press [Next] until the display shows `Dstnct ring: NONE`.
9. Press `CHANGE` to toggle to the ring pattern number you want to assign to the line (`None, 2, 3, 4`).
10. Press [ ] to exit or [Next] to continue programming.

Name

The default name for a line is Line XXX, where XXX is the three-digit line identifier. For example, Line 001.

This can be changed to any combination of letters and numbers to a maximum length of seven characters.

For more information, refer to *Modular ICS 7.0 System Coordinator Guide*.

Restrictions

Restrictions are used to prevent a user from accessing a line for making certain kinds of calls. For example, users should not be able to make long-distance calls on lines used exclusively for local calling.

Restrn filters

Restriction filters are groups of dialing restrictions and dialing overrides for external numbers or feature codes. By packing a set of restrictions and overrides in one group, you can assign them to a line in one step, as a single package.

You can make changes to restriction filters under both `Terminals&Sets`, and `Lines`. Any changes will take effect for any telephone, line, or line on a telephone, regardless of where the programming was changed.

See the description and procedures in *Restrictions* on page 378.

Line restrns

Specify the filter to be applied to this line to restrict the numbers that can be dialed on it. You can assign a different restriction filter for normal service and for each of the six schedules. See *Services* on page 381 for more information about the schedules.

Use [Show], `CHANGE` and the dialpad to enter the number of the restriction filter to be assigned as the line restriction for each schedule.

The default restrictions are shown in the table below:

Default filters for lines

Schedule	Restriction filter	Schedule	Restriction filter
Normal	03		
Sched 1 (Night)	21	Sched 4	00
Sched 2 (Evening)	22	Sched 5	00
Sched 3 (Lunch)	23	Sched 6	00

Tips - *When a remote user places an external call on a line, any filters used with the line still apply.*

Remote restrns

Specify the restriction filter to be applied to remote callers calling in to the Norstar system on this line. A restriction filter is a set or group of restrictions and overrides.

As with line restrictions, you can apply a different remote restriction for normal service and for each of six schedules.

Use CHANGE and the dialpad to program the remote restrictions for each schedule.

The default restrictions are shown in the following table.

Default filters for remote access

Schedule	Restriction filter	Schedule	Restriction filter
Normal	04		
Sched 1 (Night)	31	Sched 4	00

Schedule	Restriction filter
Sched 2 (Evening)	32
Sched 3 (Lunch)	33

Schedule	Restriction filter
Sched 5	00
Sched 6	00

Tip - *The remote restriction restricts the numbers that can be dialed on an incoming auto-answer line. If a remote user then selects a line to place an external call, any filter used with the line still applies.*

Telco features

This item allows you to assign features from a telco level.

VMsg center 1

If you subscribe to a voice message service, you can specify which voice message center is used for each external line that can receive message waiting indication.

1. For each line, press CHANGE to select a message center: 1, 2, 3, 4, 5, or N.

Note: If your system is part of a network that provides a central voice mail system on another site, you must use this field to specify that service.

Services

Using `Services`, you can control three types of service using the time of day and the day of week:

- alternate call ringing, see page 385
- alternate dialing restrictions, see page 389
- alternate call routing, see page 389

You can customize services in general under `Common Settings`. Refer to *Common settings* on page 382.

Within each type of service, you can customize six schedules.

For example, you may want to combine alternate call ringing with alternate dialing restrictions for lunchtime, evenings, and weekends (Schedules 1, 2, and 3). Then you may want to run alternate call routing using three separate schedules.

Tips - *Once you have programmed the different services and schedules, you can turn each of the services on separately. For example, the Night schedule might control both Ringing service and Restriction service. But you can turn on just the Ringing service part of the Night schedule if you wish.*

You can activate the services from the designated control telephone for each Norstar telephone and line in your system. You can have one control telephone for the whole system, or different control telephones for different Norstar telephones and lines.

If you want to have several services active at the same time, simply program them on for the same schedule.

Common settings

Services share the settings for control telephones, schedule names, and schedule times.

Control sets

A control telephone turns Services on and off for the lines and/ or telephones assigned to it. You can assign several control telephones for your system.

A control telephone for lines controls Ringing service, Restriction service and Routing service for its assigned lines.

A control telephone for telephones controls Restriction service and Routing service for its assigned telephones. Assign a control telephone for each external line and telephone.

Use [Show], [Next], CHANGE and the dialpad to program the internal number of the control telephone for each line and each telephone.

Control set configurations for both lines and telephones can be copied from one set/line to another set/line or to a range of sets/lines, or to all sets/lines, using the COPY softkey.

Tips - *External lines and telephones must be programmed with a control telephone to use the three kinds of Services. You can assign a control telephone to more than one external line or telephone, but a line or telephone cannot be assigned to more than one control telephone.*

One recommendation is to have one control telephone for all lines and a different control telephone for all telephones.

Tips - *A service can be turned on manually or automatically for all external lines and telephones controlled by a given control telephone, but you cannot combine schedules. In other words, a service can only be active as normal service or one of the six schedules at any one time. You can have several schedules active, as long as they are using different services.*

The default control telephone for all lines and telephones is ***221*** *(for systems with three-digit DNs).*

Schedule names

The schedule name is shown on the display of the control telephone when the schedule is turned on. It identifies the active schedule.

Use [Show], [Next], and CHANGE and the dialpad to program the name.

Tips - *The default names of the six possible schedules are only suggestions and may be changed to any other name. A schedule name can be one to seven characters long. It is recommended that you reserve certain schedules (4, 5, and 6) exclusively for alternate call routing (Routing service).*

Schedule times

Schedule start and stop times are set at times you are most likely to want each service to be active.

Use [Show], [Next], and CHANGE and the dialpad to program the start and stop times for each schedule, on each day.

Default schedule times

Schedule	Start time	Stop time
Schedule 1: Night	23:00	07:00
Schedule 2: Evening	17:00	23:00
Schedule 3: Lunch	12:00	13:00
Schedule 4: Sched 4	00:00	00:00
Schedule 5: Sched 5	00:00	00:00
Schedule 6: Sched 6	00:00	00:00

Tips - *It is only necessary to program start and stop times for schedules that are activated automatically. See the instructions with Ringing service for information on activating schedules.*

The time may be entered in either 12 or 24-hour format. If the display is in English, and the hour entered is less than 13, the display prompts you to specify AM *or* PM.

If you assign identical start and stop times for a schedule, for example, 04:00 start and 04:00 stop, the schedule is in effect all day. The only exception to this is a start and stop time of 00:00. In that case the schedule is off for the day.

You may assign overlapping times. For example, if schedule 1 is assigned from 9:00 am to 4:00 pm, and schedule 2 is assigned from 1:00 pm to 5:00 pm, then the start time of the second schedule is treated as a stop time for the first schedule.

Tips - *This is also true if two schedules have the same start time but different stop times. In that case, the stop time of the shorter schedule is treated as the start time of the longer schedule.*

If one schedule starts and stops within the times of another schedule, the first service temporarily ends when the second service starts. The first service then resumes when the second service has ended.

Some schedules start and stop at the same times each day. Use COPY *to copy the start and stop times from one day to the next.*

Start and stop times cannot span days.

When you program a schedule to start in the evening and stop in the morning, it does not carry over into the next day. For example, if you program Night service for Friday (22:00 to 06:00), the system turns on Night service from midnight to 6 am on Friday, and then again from 10 pm to midnight on Friday.

Ringing service

At certain times or in certain situations, you may want additional telephones to begin ringing for incoming lines. The most common use of this feature is when a security desk telephone begins to ring for incoming lines after 5:00 p.m., a practice often called *night service*.

These features are programmed under `Ringing service`.

Ringing groups

Ringing groups allows you to define groups of extended ringing sets. A group can be assigned to any line for any of the schedules. You can create up to 100 ringing groups composed of up to 30 sets for each ringing group.

To define a ringing group use [Show] and enter the number of the group you want to program (01-100).

Once you define a ringing group, the display will prompt you to enter the number of the telephone you want to assign to this ringing group. You can use `SCAN` to display the sets that are assigned to the ringing group.

Tips - *You can assign any telephone on the Norstar system to a ringing group. The assigned control set for each schedule is added to each ringing group.*

A telephone can belong to more than one ringing group.

Sched:Night

Indicate how Ringing service should be activated for each of the schedules.

Service

Use [Show] and CHANGE to change the setting for each schedule to : Off, Auto, or Manual.

Off — prevents the service from being activated.

Auto — allows you to program a start and stop time for a service. You will be prompted to enter start and stop times. You can still start and stop the service by entering the appropriate Services feature code at a control telephone.

Manual — allows you to turn the service on and off at any time from a control telephone using the Ringing service feature code.

Trunk answer

Trunk answer allows you to answer, from any telephone, an external call that is ringing at another telephone in your office. This is useful if the other telephones have not been assigned the same lines as the telephone you are using to answer the call.

Press CHANGE to select the setting: Y (Yes) or N (No).

Tip - *You can change the Trunk Answer setting only if* `Ringing service` *is set to* `Manual` *or* `Automatic`.

ExtraDial telephone

ExtraDial telephone allows you to assign an additional direct-dial telephone in the Norstar system for each schedule you use.

Use CHANGE and the dialpad to enter the internal number of the extradial telephone.

Tip - *The extradial telephone is activated during a schedule by entering the Ringing service feature code from a direct-dial telephone. This does not activate the Ringing service unless the direct-dial telephone is also a control telephone.*

Line settings

The ring groups and auxiliary ringer for Ringing service is programmed for each line individually.

Ringing group
You can assign a predefined ringing group to a line for each schedule. See *Ringing groups* **on page 385** to create groups of extra ringing telephones.

Use the dialpad to enter the line number to see which ringing group is assigned to the line.

To choose a different ringing group assignment, press CHANGE and enter the new ringing group number (01-100)

Tip - *Only one ringing group can be assigned to a line for each schedule. To combine groups of ringing telephones, you must create a new ringing group which contains all the telephones you want to ring and assign the group to the line.*

Aux. ringer

Indicate whether the auxiliary ringer, if installed, also rings when Ringing service is on.

Press CHANGE to select either: Y (Yes) or N (No).

Tips - *The default ringing telephone is 221 (for systems with a DN length of 3). This means that all lines ring at telephone 221 when Ringing service is on.*

You can use COPY and the dialpad to copy Ringing set and Auxiliary ringer programming from one line to another.

If you have an auxiliary ringer programmed to ring for calls on an external line, and you transfer a call on that line without announcing the transfer, the auxiliary ringer will ring for the call transfer.

Restrn service

These settings indicate how the alternate dialing restrictions should be activated for each of the schedules.

Use [Show] and CHANGE to change the setting for each schedule: Off, Automatic, or Manual.

For information about using schedules, refer to the *Modular ICS 7.0 System Coordinator Guide*.

Tips - *A schedule must be active for overflow routing to be in effect. Overflow routing is not available in normal mode.*

You must create an overflow route to be used with each destination code. In this way, every route used with a scheduled mode that has overflow service must have an alternate route in normal service.

See *Ringing service* on page 385 for descriptions of the three activation settings.

See Restrictions under both Terminals&Sets and Lines to assign dialing restrictions for telephones, lines and remote users to the schedules.

Routing service

The programming for routing decides what path an outgoing call takes using the digits that are dialed. It is sometimes called Automatic Route Selection (ARS).

When you select an internal line and dial, the numbers you enter are checked against the routing tables. If the number you dialed starts with a destination code, the system uses the line pool and dials out digits specified by the route assigned to that destination code, and then dials the rest of the number that you dialed.

Plan your routing service before doing any programming.

Routing affects every call placed in the system and must be carefully planned to avoid conflicts and gaps in the programming. Use the tables in the *Programming Record* to design routes and destination codes, then check for potential problems before you start programming.

Routing service replaces a number of tasks that otherwise have to be done manually, including:

- entering a line pool code
- dialing an access code for a long distance carrier
- deciding which line pool to use according to the time and day

The installer can set up routing to take advantage of any leased or discounted routes using information supplied by the customer. The system itself cannot tell which lines are cheaper to use.

For Call by Call service selection (PRI only), the installer defines destination codes for various call types over PRI lines (e.g. Foreign Exchange, Tie Trunk, and OUTWATS). This information is then recorded in the routing and dialing plan section of the Programming Record for the PRI-A pool (and PRI-B, PRI-C or PRI-D if there are two or more PRI cards).

The user simply dials a number via the intercom button without entering any special information. For more information see, *Programming Call by Call service selection* on page 474.

How to use routing to create a uniform dialing plan (UDP) or coordinated dialing plan (CDP) is explained in *Dialing plans* on page 112.

Routes and destination codes

Installer password required

Programming for a route makes use of:

- destination codes (maximum of 500 available, with a maximum of 12 digits per code)
- a three-digit route number (000-999)
- a line pool
- DialOut digits (up to 24 digits)
- a schedule (programmed in Services), which allows three alternate routes per schedule

Routing table modifications

Changes to the routing tables can only be made during low-activity periods or on an idle system. Plan to program the routing tables when user activity is at a minimum.

Alternatively, Norstar Remote Utilities (NRU) can be used to back up, modify and restore these tables.

Tips - *To dial a telephone number which does not match any of the programmed destination codes, the user chooses a line and dials the number. For long distance dialing, area codes in the North American numbering plan can be programmed as destination codes.*

Routes

Installer password required

Press [Show] and enter a three-digit route number (000-999).

DialOut

DialOut is the number you want the route to use.

Press [Show] and enter the DialOut digits (up to 24), or press CLR to choose No numbr.

You can press [✆] [7] [8] to insert a 1.5-second pause in the dialing string, if necessary.

Route 000 has no DialOut by default and cannot be changed.

[✆] [7] [1]	Link – if your Norstar system is connected to a private branch exchange (PBX), you can use a Link signal to access special features.
[✆] [7] [8]	Pause – Enters a 1.5-second delay in a dialing sequence on an external line.
[✆] [*] [8] [9]	Programmed Release – performs same function as [☎] in a programmed dialing sequence. When the system encounters Programmed Release in a dialing sequence, it stops dialing and hangs up the call.
[✆] [*] [9]	Run/Stop – inserts a break point into a sequence of dialed numbers or characters used for automatic dialing.
[✆] [8] [0] [4]	Wait for Dial Tone – causes a sequence of numbers to pause until dial tone is present on the line before continuing to dial.

See the *Modular ICS 7.0 System Coordinator Guide* for more information.

Use Pool

Press [Next] and CHANGE to select a line pool to be used with the route: **Pool A**, Pool B...Pool O or PRI-A to PRI-D.

Route 000 uses Pool A by default and cannot be changed.

Routing table

Call by Call Service information for outgoing calls is recorded in the Routing Service section of the Programing Record.

The following is an example of a Routing Table containing CbC programming.

Route # (000-999)	Dial Out (24 digits)	Use Pool	Service Type	Service Identifier
003		PRI-A	Public	
004		PRI-A	FX	xxxxx
005		PRI-A	Tie	xxxxx
006		PRI-B	OUTWATS	xxx
007		PRI-B	Private	
008		PRI-B	Switched Digital	

Note: The public DN lengths are used for all PRI calls except those whose routes use service type Private or service type Tie with DN Type specified as Private.

The service identifier (SID) depends on the selected service type. For example, with NI-2 protocol.

Service Type	Service Identifier description
Public	None
FX	Facility Number 1-5 digits
Tie	Facility Number 1-5 digits
OUTWATS *	Optional Band Number 1-3 digits
Private	None
Switched Digital	None

* For NI-2, do not program the Carrier Access Code for banded OUTWAT calls. This call may be rejected.

When a PRI protocol is selected or changed, the Service Type and Service ID fields are automatically cleared for each entry in the routing table for that PRI.

Programming the PRI routing table

The dialing plan must be thoroughly planned out in advance before programming the information into the Norstar system.

Programming the routing table takes place in Services under Routing Service/Routes

1. Press [Show]. The display shows Show route.
2. Press [Next]. The display shows Rte001.
3. Press [Show]. The display shows Dial-Out:No numbr.
4. Press CHANGE to enter a number (up to 24 digits).
5. Press [Next]. The display shows Use: Pool A.
   The PRI pool(s) displayed depend on how the PRI lines are put into pools in the Trunk/Line data section of programming. It is possible to have only one PRI pool even if there are two or three PRI cards in the system.
6. Press [Next]. The display shows SrvcType:Public.
   Press CHANGE to select a different Service Type.

   Note: This parameter displays for specific protocols, such as N12, DMS100, DMS250.

7. Press [Next]. The display shows Service ID:None.
   Press CHANGE to enter the Service ID number.
   This parameter displays for specific protocols, such as N12, DMS100, DMS250.
8. Press [Next]. The display shows DN type:Public.
   Press CHANGE to enter Public or Private.

Note: This variable displays only for service type Tie.

Dest codes

Installer password required

The first digit of the destination code cannot be the same as:

- Call Park Prefix (*Park prefix* on page 457)
- External Access code (*External code* on page 458)
- Direct Dial numbers (*Direct-dial #* on page 458)
- Line Pool code (*Line pool codes* on page 455)

The entire destination code cannot conflict with:

- internal set numbers (*Terminals&Sets* on page 335)
- DISA DNs (*DISA DN* on page 459)
- Auto DNs (*Auto DN* on page 459)

For instance, if your park prefix is 1, and you want to start your destination codes with 1, you must change the park prefix first.

If your line pool code for the local PBX is 9, and you want to start your destination codes with 9 to allow routing to the local PBX, you must create a destination code that includes the line pool for the PBX and delete the line pool code for 9.

The following are the *default* numbers automatically assigned in MICS-XC 7.0:

System type	Expansion used	Initial digits pre-assigned
mini	no expansion	0, 1, 2, 6 & 9
midi	one 2-port cartridge	0, 1, 2, 3, 6 & 9
maxi	one 6-port cartridge	0, 1, 2, 3, 4, 6 & 9
mega	two 6-port cartridges or two combo cartridges	0, 1, 2, 3, 4, 5, 6 & 9

The following are the *default* numbers automatically assigned in a MICS 7.0 system:

System type	Expansion used	Initial digits pre-assigned
mini	no expansion	0, 1, 2, 3, 4, 5, 6, 7, 8 & 9
midi	one 2-port cartridge	0, 1, 2, 3 & 9
maxi	one 6-port cartridge	0, 1, 2, 3, 4 & 9

To make the digits available for use with destination codes, you must change the DN length of B1 and B2 DNs, depending on your system size. This can be done either at system startup or in System prgrming. The examples shown above use a three-digit DN length, unless stated otherwise.

Wild card character

When programming destination codes, you can use wild cards as the last number in a destination code string. By using wild cards, you can reduce the number of destination codes programmed in the system, maximizing the distribution of destination codes in the system.

The wild card character is added to the destination code by pressing the ANY key as the last digit of the code. This character represents any digit from 0 to 9, except for digits already programmed or used by other numbering plans. Should there be a conflict with other digits already programmed or used with by numbering plans, the digit will not be allowed.

The wild card character can only be used to group destination codes that use the same Route and Absorb Length.

Given the routes shown in the table below, the following two tables show you how to set up destination codes with or without wild card characters.

Example routes:

Route	DialOut	Line Pool
555	0162 237 625	Line Pool C
565	0173 133 2211	Line Pool A

Destination codes without using a wild card character

Destination codes	Route	Absorb Length	DialOut
0621	555	3	0162 237 6251
0622	555	3	0162 237 6252
0623	555	3	0162 237 6253
0624	555	3	0162 237 6254
0625	555	3	0162 237 6255
0626	555	3	0162 237 6256
0627	565	All	0173 133 2211
0628	555	3	0162 237 6258
0629	555	3	0162 237 6259

Destination codes using a wild card character

Destination codes	Route	Absorb Length	DialOut
062 •	555	3	0162 237 625X where X is the final dialout digit, from 1 to 9, but not 7
0627	565	All	0173 133 2211

Normal rte

Select which route a call using the destination code takes during normal service and for each of the schedules. The automatic schedule times are programmed under Services. The default Normal route is **000**, which has no DialOut digits and uses Pool A.

Digit Absorption

Select the portion of the destination code that is always absorbed by the system and not used in the dialing sequence.

Press CHANGE to select the number of digits to be deleted: (0 to 11) or **All**.

Tips - *The digit absorption setting (Digit absorb) only applies to a maximum of two schedules.*

Setting digit absorption to 0 (zero) minimizes the effort involved in preparing destination codes. With a 0 setting, the actual digits dialed by a caller are preserved in the dialout sequence. Programming a DialOut sequence as part of the route may or may not be necessary, depending on the required dialout.

Setting up a route for local calling **Installer password required**

An office may have different suppliers for local and long distance telephone service. By programming a destination code, any call that begins with 9, the most common dialout digit, will automatically use lines dedicated to local service.

The first step is to build a route (under `Services/Routing Service/Routing`).

1. At `Show route:` enter 001 (or any other available route number)
2. Press `SCAN` to view defined routes and press `CLEAR` to erase a defined route.
3. Choose the line pool that contains the lines for local calling.
4. Enter the DialOut digits (if any) which are needed to direct the call once it is connected to an external line.

Note: For local calls only, there are no DialOut numbers. Compare this with *Setting up a route for long distance calling* on page 401.

5. Now you need to set up a destination code that will use this route during the various schedules. Since users will dial 9 to make an external call, 9 should be the destination code. (`Services/Routing Service/Dest Codes`)
6. At `Show DstCode:` press `ADD` and enter 9.

Tips - *If entering a code other than 9, a valid destination code must be used. See Dest codes on page 395.*

To view existing destination codes press Next *before entering a new code.*

Tip - *The destination code can use a different route depending on which schedule is being used. Refer to Services in the Modular ICS 7.0 System Coordinator Guide for information about using schedules.*
In the current example, Route 001 is used when someone dials 9 during normal mode. This is the mode used when the other Schedules are turned off.

7. Press [Show].

   The route for the first schedule appears after `Normal:`.

8. Press `CHANGE` and enter the defined route number 001.

The following illustrations show the tables used for planning and recording routing service found in the *Programming Record*. They are filled out to match the examples of routes for local and long distance calling.

Recording the routes

Page 24

Routing Service (Services: Routing Service)

Route # (000-999)	**DialOut** (if required) (max. 24 characters)	**Use Pool**
001	*none*	(A) B C D E F G H I J K L M N O PRI-A PRI-B PRI-C PRI-D
002	*none*	A (B) C D E F G H I J K L M N O PRI-A PRI-B PRI-C PRI-D

Recording how the routes will be used

Destination codes (Services; Routing service; Destination codes)

Service Schedule name (max. 8 digits)	**Normal Rte**		**Other schedules:**					
DestCode (max. 12 digits)	**Use route** (000-999)	**Absorb Length**	**1st route** (000-999)	**Absorb Length**	**2nd route** (000-999)	**Absorb Length**	**3rd route** (000-999)	**Absorb Length**
9	~~000~~ *001*	All		All		All		All
1	~~000~~ *002*	~~All~~ *0*		All		All		All
	000	All		All		All		All

Setting up a route for long distance calling

Installer password required

An office may have leased lines or E&M trunks which make it cheaper to call long distance.

The routing should take place automatically when the number of the outgoing call begins with 1.

The first step is to build a route (under `Services/Routing Service/Routing`).

1. At `Route:`, enter 002 (or any other available route number)
2. Choose the line pool where the discounted lines for calling long distance have been placed. Example: Line pool B.
3. Then you need to assign the route to the destination code and to the destination code schedules. (under `Services/Routing Service/Dest Codes`)
4. At `DstCode:` enter a valid destination code.
   Example: 1403

   Refer to *Dest codes* on page 395.

Tip - *To view existing destination codes press* Next *before entering a new code.*

Tip - *The destination code can use a different route depending on which schedule is being used. Refer to Services in the Modular ICS 7.0 System Coordinator Guide for information about using schedules. In the above example, the system uses Route 002, which uses Line pool B, to take advantage of the lower cost when the system is in normal mode.*

5. Press [Show].

   The route for the first schedule appears: `Normal:`

6. Press `CHANGE` and enter the defined route number 002.
7. Press [Show].

   The `AbsorbLength` prompt appears. The default is `All`.

8. Press `CHANGE` to choose the number of digits that need to be absorbed before dialout. In this case, it would be 0, as 1 needs to be dialed out before the rest of the digits.

Tips - *The digit absorption setting (`AbsorbLength`) only applies to a maximum of two schedules.*

Setting `AbsorbLength` to 0 (zero) minimizes the effort involved in preparing destination codes. With a 0 setting, the actual digits dialed by a caller are preserved in the dialout sequence. Programming a DialOut sequence as part of the route is not necessary.

Tips - *If rates change depending on the time of the day or week, a different route can be used for the same destination code 1 when a particular schedule is in use. See Programming for least cost routing on page 406.*

Configuring the second dial tone table

Installer password required

This feature, introduced in the MICS 6.1 Maintenance Release, provides dial tone for outgoing calls on any PRI line, based on the digits dialed. Digits dialed must match an entry in the second dial tone table to enable a second dial tone. Dial tone occurs on the line until another digit is dialed, a timeout occurs, or the user hangs up.

Up to 10 separate entries can be stored in the second dial tone table. The maximum digit length for each entry is four. Each entry must be unique and cannot conflict with:

- Internal DNs
- Hunt Group DNs
- DISA DNs
- Auto DNs
- Target line DNs

Tips - Entries can match destination or access codes for outgoing lines.

Programming the second dial tone table takes place in `Services` under `Routing Service/2nd Dial Tone`.

1. Press [Show]. The display shows `None defined`.
2. Press `ADD` to enter a number from one to four digits long
   or
   press `BKSP` to erase a digit.
3. Press `OK` to accept the number.
   The display shows `2DT:` <number>.

4. Press ADD to enter another number in the second dial tone table
   or
   press REMOVE to delete the current entry, then enter a new number.

5. Repeat steps 2 to 4 to assign up to 10 entries in the table.

Note - Second dial tone is not provided on outgoing lines for remote access users and for ISDN terminal users when the Call Transfer feature is activated.

Adding a long distance carrier access code

Installer password required

In many cases, long distance service uses the same lines as local service but the call is switched to a specific carrier using an access number. This number is sometimes called an equal access code. Programming for routing can include this access number so users only need to dial the set number, as described below:

1. Create a route that uses a line pool containing local lines only.

2. Program the route to use a line pool containing the lines used to access the long distance carriers.

   a. Enter the DialOut digits, which are the same as the carrier code digits. For example, if the access code was 10222, the DialOut digits would be 10222.
      Carrier codes are defined in *Carrier Codes* on page 461.

   b. Create a destination code 91.
      9 (for outside access) and 1 (for long distance). Refer to *Dest codes* on page 395 to determine a valid code.

c. Set `AbsorbLength` to 1.
The 9 is only used internally and should be dropped. The 1 is needed to direct the call to the public carrier network.

Tips - *The destination codes 9 and 91 used in the examples cannot be used together. If the destination code 91 is needed to direct long distance calls, you must create a separate set of codes that use local calling routes. These codes would be, for example, 90, 92, 93, 94, 95, 96, 97, 98 and 99. See Wild card character on page 396 for information about programming destination codes.*

Using destination codes to make a call

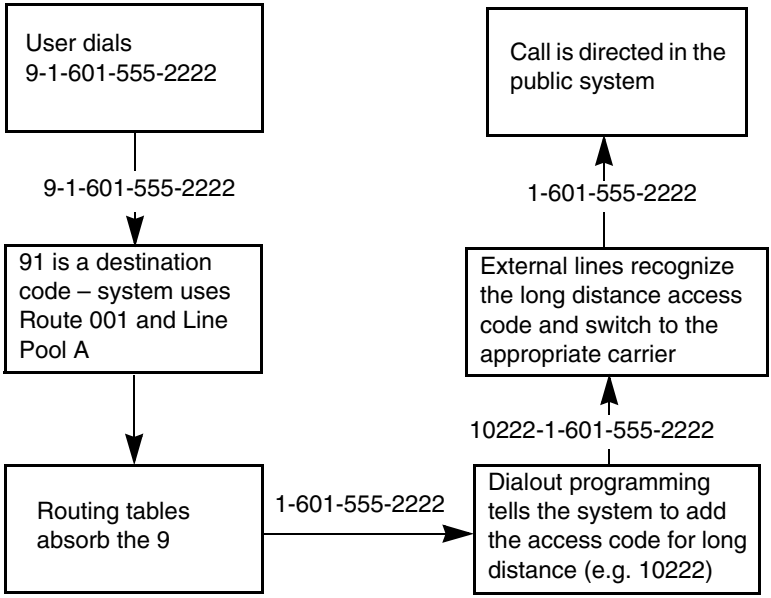

Programming for least cost routing

Installer password required

It may be cheaper to use another long distance carrier at another time of day.

Continuing with the example used in the previous flowchart, the lines that supply local service in Normal mode will also be used for long distance service after 6 p.m. because that is when rates become competitive. For the system to do this automatically, another route has to be built.

1. At `Route:` choose Route 007 (or any available route).
2. Press [Show].
3. At `DialOut`, press CLR to choose `No numbr`.
4. Press [Show].
5. Choose `Line pool A`, or the pool with the local service carrier lines.

   In this case, the change in route uses the start and stop times for Night Sched.

6. Return to the Routes heading and press [Next] to find the `Dest Code` heading.
7. Press [Show] and then [Next].
8. At `DstCode:`, press ADD, then enter `91`.
9. Press [Show] and then [Next] to reach the Night schedule.
10. Press [Show]. The first route for the schedule appears.
11. Enter `Route 007`.
12. Press [Next].

13. Set AbsorbLength to 1.

    The 9 will be absorbed before the number is dialed out to the network. This means, that when the Night schedule is chosen, either automatically by time, or manually from a control telephone, the calls dialed with 91 will dial out to the long distance network without requiring a special access code.

To set up multiple alternative routes, refer to the next section, Multiple least cost routing.

Multiple least cost routing

An alternative to overflow routing, is to use multiple least cost routing, which is available to all schedules except Normal.

This feature allows you to specify three possible routes within each destination code schedule, in order of preference, if you are using active services for your routing.

In the route file for which you want to specify multiple routing:

1. Create a destination code file, then select this file.
2. Press [Show].
   The Schedule heading appears.
3. Press [Show]. The Normal heading appears.
4. Press [Next] until you find the schedule you want to program.
5. Press [Show]. The first route appears.
6. Enter the preferred route number.
7. Press [Next] and choose an absorb length.
8. Press [Next] and the second route appears.

9. Enter the route number for the second preferred route.
10. Press [Next] and choose an absorb length.
11. Press [Next] and the third route appears.
12. Enter the route number for the third preferred route.
13. Press [Next] and choose an absorb length.

Sched:Night

Indicate how the alternate routing should be activated for each of the schedules.

Service

Use [Show], CHANGE, and [Next] to change the setting for each schedule to one of these settings: Off, Automatic, or Manual.

Off — prevents the routing service from being activated. In this case, the Normal schedule is used.

Auto — allows you to program a stop and start time for a service. You will be prompted to enter start and stop times. You can still start and stop the service by entering the appropriate Services feature code at a control telephone.

Manual — allows you to turn the service on and off at any time from a control telephone using the Ringing service feature code.

Refer to the *Modular ICS 7.0 Coordinator Guide* for a description of the feature codes used to work with Services.

Overflow routing

If all the lines used by a route are busy when a call is made, the mode may be programmed to overflow to the route used for normal mode. If this happens, the telephone will sound a warning tone and display the message Expensive route. The caller can then release the call to avoid using the Normal route, or continue with the call.

Also refer to the section on Multiple least cost routing on the preceding page.

Overflow routing is turned on or off for each schedule when you program the destination codes schedule.

Press CHANGE to select the setting: Y (Yes) or N (No).

Refer to the *Overflow call routing* section of the *Modular ICS 7.0 Coordinator Guide* for details about how to set up overflow routing.

Tips - *A schedule must be active for overflow routing to be in effect. Overflow routing is not available in Normal mode.*

You must create an overflow route to be used with each destination code. In this way, every route used with a scheduled mode that has overflow service must have an alternate route in Normal service.

Using dialing restrictions with routing

Installer password required

Routing service can be further customized by adding dialing filters to lines in line pools. Filters restrict the use of the line to specific area codes. See *Restriction filters* on page 104 and the *Programming* chapter of the *Modular ICS 7.0 System Coordinator Guide* for more information.

Tips - *You can also use routing as an alternative method for a direct-dial number. For example, create a destination code 0 and program the number of the internal or external destination as the DialOut. Digit absorption should be set to 1.*

Because overflow routing directs calls using alternate line pools, a call may be affected by different line filters when it is handled by overflow routing.

Tips - *Host system signaling codes can be part of the DialOut. See the Modular ICS 7.0 System Coordinator Guide for details on host system signaling codes.*

Sys speed dial

System speed dial allows you to configure speed dial codes (001 - 255) that can be used by any telephone on the system to dial pre-programmed numbers.

If you specify a name with the speed dial entry, an incoming call on a CLID line with a dialed number that matches the speed dial entry will display the name as part of the CLID display on the receiving telephone or when [e] [8] [1] [1] is invoked to display call information. This method of using the system speed dial entries for CLID display is called Alpha tagging.

Note: Alpha tagging is only invoked when the CO line service does not supply a name for the incoming call. It will only occur on telephones that have Caller ID set turned on (*Telco features* on page 357).

The CLID Match setting (*CLID match* on page 446) determines how many digits of the received number must match the system speed dial number to be accepted as a CLID match to allow the name display to occur.

For more information about using and programming System speed dial, refer to the *Modular ICS 7.0 System Coordinator Guide*.

For information about configuring the system so that the name displays first, refer to *1stDisplay* on page 359.

Passwords

COS pswds

Class of Service (COS) passwords permit controlled access to system resources by both internal and remote users.

When you enter a COS password at a telephone, the restriction filters associated with your password apply instead of the normal restriction filters. Similarly, when a remote user enters a COS password on an incoming auto-answer line, the restriction filters and remote package associated with their COS password apply instead of the normal restriction filters and remote package.

COS pswds allows you to define individual passwords and determine the restriction filters and remote package associated with each.

Tips - *The Class of Service passwords for a system should be determined randomly and should be changed on a regular basis.*

Users should memorize their COS passwords. COS passwords should be deleted when an employee leaves the company.

Tips - *Typically, each user has a separate password. Alternately, several users can share a password or one user can have several passwords.*

A system can have a maximum of 100 six-digit COS passwords (00 to 99).

You can use COPY *and the dialpad to copy the restriction filters and remote package from one COS password to another. COS passwords must be unique.*

Pswd

Pswd defines the six-digit Class of Service password.

There is no default password.

Use [Show], CHANGE and the dialpad to program the six-digit password.

Use BKSP to edit numbers you have entered.

User flt

User filter allows you to assign a restriction filter to a COS password. The user filter associated with the COS password replaces any normally-applicable set restriction, line/set restriction, or remote restriction.

Use CHANGE and the dialpad to program the two-digit user filter.

The default setting (None), means that any normally-applicable filters still apply (set restriction, line/set restriction, or remote restriction).

Line flt

Line filter allows you to assign a specific line restriction to a COS password. The line filter associated with the COS password replaces any normally-applicable line restriction.

Use CHANGE and the dialpad to program the two-digit line filter.

The default setting (None), means that any normally-applicable line filter still applies.

Remote pkg

Remote pkg allows you to assign a specific remote access package to a COS password.

The remote access package associated with the COS password replaces any normally-applicable remote access package.

Use CHANGE and the dialpad to program the two-digit remote package.

The default setting (None), means that any normally-applicable remote access package still applies.

Call log pswds

This setting allows you to override any Call log password programmed with the Call log feature, and resets it to None. This feature is used when someone forgets a password.

1. Press [Show].
2. Enter the DN of the telephone.
3. Press [Show].
4. Press CLR to clear the programmed password.

Tips - *You program a Call log password using the Call log Password feature. Refer to the Telephone Feature Card or the Modular ICS 7.0 System Coordinator Guide for more information.*

Progrming pswds

You can choose any combination of six digits for Passwords.

Tip - *It is easier to remember the password if the digits spell a word.*

Some passwords allow line assignments to be rearranged, which could disrupt your telephone service. Provide passwords only to selected personnel to prevent unauthorized access to programming.

Installer

The default Installer password is **266344 (CONFIG)**.

1. Use CHANGE, the dialpad, and OK to program the Installer password.
2. Record the password in the *Programming Record*.

Tips - *You can choose any combination of one to six digits. It is easier to remember the password if the digits spell a word. Provide this password only to selected personnel to prevent unauthorized access to programming. The implications of such access may include the rearrangement of line assignments, which could affect the operation of the Norstar system.*

SysCoord+

The default System Coordinator Plus password is **727587 (SCPLUS)**.

Use CHANGE, the dialpad, and OK to program the System Coordinator Plus password.

Tips - *You should only distribute this password to experienced System Coordinators. This level of access is documented in the Modular ICS 7.0 System Coordinator Guide.*

An overview of what programming is available by using the System Coordinator Plus password is on page 306

SysCoord

The default System Coordinator password is **23646 (ADMIN)**.

Basic

The default Basic password is **22742 (BASIC)**.

Tips - *For more information about the System Coordinator and Basic passwords, see the Modular ICS 7.0 System Coordinator Guide.*

Hospitality password

There are two passwords within the Hospitality feature. Desk pswd provides secure access to the administration set for programming the service, and Cond pswd provides secure

access to a room condition setting from each room set for housekeeping staff.

Desk pswd

Change this password frequently, to maintain security.

At Hospitality:

1. Press [Show]. Desk pswd:4677 displays.
2. Press CHANGE. New pswd: displays
3. Enter a new password, then press OK.

Cond pswd

Change this password frequently, to maintain security.

At Hospitality:

1. Press [Show].
2. Press [Next] Cond pswd:None displays.
3. Press CHANGE. New pswd: displays
4. Enter a new password, then press OK.

Silent Monitor password

Users must enter a password when they use [✆] [*] [5] [5] [0] to monitor Hunt group calls.

It is advisable to change this password frequently.

At SM Passwd:

1. Press [Show]. SM Passwd: displays. (default: 745368 (SILENT))
2. Press CHANGE. New pswd: displays
3. Use the keypad to enter a new password.
4. Press OK.

Time&Date

The time and date shown on the telephone display is used by the system for scheduled features. It can be changed in programming or by using a feature code (✆ * * T I M E or ✆ * * 8 4 6 3).

For more information, refer to the *Modular ICS 7.0 System Coordinator Guide*.

System prgrming

System prgming allows you to set up features and settings which are not associated with any specific line or telephone.

Hunt groups

The Hunt groups feature allows a group of telephones to be called by a single directory number, ensuring that calls are easily routed to the appropriate group.

The default setting for Hunt groups is Broadcast. Hunt group statistics are available under Usage Metrics on page 583.

Hunt groups can be used to route calls to a support service such as a Help Line for a software company. Specialists dealing with Product A can be in one group. Specialists dealing with Product B can be in another group. Incoming calls will target a specific group and hunt for the next available telephone in the group. If no telephone is available, the call can be placed in a queue or can be routed to an overflow telephone.

The Hunt groups subheading in system programming is the area that programming changes are made to the following:

- members of a group
- member position in a group
- what lines are assigned to a group
- how incoming calls are distributed
- how long the system looks for available agents
- where a call goes if all agents are busy

The hunt group setting impacts other features:

- Call forwards set on telephones that are members of a hunt group are overridden by the hunt group routing.
- Telephones which are members of a hunt group can temporarily leave a group by activating the DND feature.
- Wireless twinning can be enabled if a hunt group appears on the portable as well as the set.
- Priority calls to a hunt group will be rejected
- Hunt group set numbers cannot be in a ringing group.
- Hunt group set numbers cannot be in a page zone.
- Hunt group member line keys take precedence over Hunt group key, therefore, it is recommended that you do not assign any lines to telephones which are part of the hunt group. If you do assign lines to a hunt group telephone, ensure they do not duplicate any of the lines assigned to the Hunt Group DN (Upgraded systems: 707-736; New 7.0 systems: 739-768).

Note: Do not program videophones as members of a hunt group. Hunt groups allow one B channel connection at a time and videophones use two B channels.

Adding or removing members from a group

- Members of the group can be any system telephone, ISDN telephone, or portables.
- A telephone can be in more than one hunt group, but is considered a member in each hunt group, increasing the total number of members in the system.
- There will be only one appearance of the same hunt group on a telephone, regardless of how many lines are assigned to the hunt group. The appearance can be set to: `Appr&Ring`, `Appr only`, or `Ring only`.

- The DN number range for hunt groups is 707-736 for systems upgraded from versions prior to 7.0, and 739 to 768 on new 7.0 systems.

Tip - *You must program the DNs for telephones you want to use for hunt group members outside the hunt group DN range.*

- If you want the enhanced central answering position (eCAP) to display Hunt Group appearances in order to monitor activity, the 7316E digital phone must be a member of the hunt group. Hunt group appearances can be moved from the main telephone to the extended key indicator modules (eKIMs) using [✆] [*] [8] [1]. Refer to *CAP/KIM assign* on page 449.
- If any of the telephones you want to add to the hunt group have lines assigned that are the same as the hunt group, remove the line from the telephone before assigning it to the hunt group.

Hunt groups can be programmed under System prgrming.

1. Press [Show]. The display shows Hunt groups.
2. Press [Show]. The display shows Show group:.
3. Enter the hunt group number you want to program (1-30).
4. Press [Show]. The display shows Member DNs:.
5. Press [Show]. The display shows the members for that group.
6. Press ADD to add a member or press REMOVE to remove a member from the group.
7. Select Appr&Ring, Appr only, or Ring only for the hunt group member. See *Appearances* on page 337.

Note: Fixed external cadencing is provided for all external hunt group calls regardless of whether or not they have been answered and transferred.

Moving members of a group

Member order within a hunt group is important. The member order determines how a call is routed through a hunt group.

1. Press MOVE to move an existing member to another place within the hunt group.The display shows the member number followed by an arrow.
2. Enter the new position number for the telephone.

Assigning or unassigning lines to a group

To avoid delayed ring transfer of external hunt group calls to a prime set, ensure that the hunt group prime line is set to None.

A line can only be assigned to one hunt group.

1. When the display shows Member DNs:.
2. Press [Next]. The display shows Line assignment.
3. Press [Show]. The display shows Show line:.
4. Enter the line number you want to program, press SCAN to go the first line assigned to this group, or press LIST to go to the first line in the system.
5. Press CHANGE to program the line as Unassigned or Assigned.

   HGnn means the line is assigned to another hunt group.

Setting the distribution mode

There are three modes of call distribution:

- `Broadcast` — rings each telephone in the group simultaneously. Calls are handled one at a time, other calls are queued. As soon as a call is picked up, the call next in the queue is presented to the hunt group without waiting for queue timeout.
- `Sequential` — starts the call at the first telephone in the hunt group. Distribution is complete when the first free telephone is found. This telephone is the only one that rings for this call. Simultaneous calls can be presented. Distribution is order based, so ensure your hunt group members are listed in priority. Refer to *Moving members of a group* on page 423 and *Setting the hunt delay* on page 425.
- `Rotary` — the call starts at the telephone after the one which last answered a call. Distribution is complete when the next free telephone is found. Simultaneous calls can be presented. Distribution is order based, but this mode ensures that all members of the group are receiving calls, rather than one person receiving the majority of calls. Refer also to *Setting the hunt delay* on page 425.

When the display shows `Member DNs:`.

1. Press [Next] until the display shows `Mode:`.
2. Press `CHANGE` to set the mode: `Broadcast`, `Sequential`, `Rotary`.

If a hunt group has available agents but nobody answers the call, the call is routed according to what is set in the `Busy line` setting. Refer to *Programming busy line setting* on page 425,.

Setting the hunt delay

This setting allows you to program the number of rings the system permits at a hunt group telephone before moving on to the next telephone in the hunt group. This display only shows if the distribution mode is set to sequential or rotary.

1. When the display shows Member DNs:.
2. Press [Next] until the display shows Hunt delay:.
3. Press CHANGE to select the setting: 1, 2, 3, 4, 5, 6, 7, 8, 9, 10.

Programming busy line setting

There are three routing options if all agents are busy:

- BusyTone—the caller gets a busy tone for PRI or BRI, otherwise the telephone rings back.
- Overflow—the call is routed to an overflow position. You cannot use overflow if the overflow DN is a hunt group DN.
- Queue—the call stays in the system for a period of time. Within this period of time, the call will be presented to an agent if one becomes available. When the time-out occurs, the call will be presented to an overflow position.

1. When the display shows Member DNs:.
2. Press [Next] until the display shows If busy:.
3. Press CHANGE to set the mode: BusyTone, Overflow, Queue.

Programming the queue timeout

This setting allows you to program the number of seconds a call will remain in the hunt group queue before it is also routed to the overflow position.

1. When the display shows Member DNs:.
2. Press [Next] until the display shows Q Timeout:.
3. Press CHANGE to set the queue timeout: 15, 30, 45, 60, 120 or 180.

Programming the overflow set

This setting allows you to indicate a telephone to which the hunt group calls will be routed when the queue is full.

- If the overflow telephone is not a hunt group member, the call ceases to be a hunt group call once it transfers.
- If the overflow telephone is a hunt group member, the call is treated as a new call and goes to the bottom of the queue.

The assigned overflow position can also can be a DN number associated with a voice mailbox.

1. When the display shows Member DNs:.
2. Press [Next] until the display shows Overflow:.
3. Press CHANGE to change the overflow position.
4. Enter the new overflow set or mailbox number.

Setting the Hunt group name

This setting allows you to program the hunt group function name, such as *Service* or *Sales*. The name can be up to seven characters in length.

1. When the display shows Member DNs:.
2. Press [Next] until the display shows Name:.
3. Press CHANGE.
4. Use the dialpad to enter the name of the hunt group.
5. Press [Next] to store the name.

Allowing/disallowing an auxiliary ringer

This setting allows you to allow/disallow an external ringer to sound when a call comes in for a specific hunt group. If you allow this service, you must have an auxiliary ringer properly installed on your system. Refer to *Auxiliary ringer (customer supplied)* on page 297.

1. When the display shows Member DNs:.
2. Press [Next] until the display shows Aux. Ringer:.
3. Press CHANGE to choose Y (yes) to turn the ringer on or N (No) to disallow an auxiliary ringer.
4. Press [☎] to exit or [Next] to continue programming.

Assigning a distinctive ring pattern to a Hunt Group

You can assign distinctive ring patterns to your Hunt Group so that calls can be rated in priority for the group.

These distinctive ring patterns have the same characteristics as for line and extension distinctive ring patterns. Refer to *Programming distinctive ring patterns* on page 376.

The Hunt Group distinctive ring pattern determines how a call will ring within the Hunt Group. If members of the group have ring patterns assigned to their telephones that are higher than the ring patterns of the incoming line or the Hunt Group, then the Hunt Group will use the ring of the corresponding member telephones. If the incoming call (line) has a higher ring pattern assigned, than the Hunt Group, the Hunt Group will ring with the line ring pattern.

1. Find the heading Hunt groups.
2. Press [Show] until the display shows Member extns:.
3. Press [Next] until the display shows Dstnct Ring:NONE.
4. Press CHANGE to toggle to the ring pattern number you want to assign to the Hunt group line. (None, 2, 3, 4)
5. Press [☎] to exit or [Next] to continue programming.

Monitoring Hunt groups

You can set up your system to allow a number of two-line display telephones to be used as monitoring devices for hunt group members.

Using the various supervisory features you can determine:

- the number of monitoring telephones you will allow on the system (default: 5). Refer to *SM sets* on page 480.
- which telephones will be allowed to act as silent monitor supervisors. Refer to *Capabilities* on page 345 for information about designating two-line display telephones as supervisor telephones.
- whether there will be an indicator tone when the monitoring telephone breaks into a call. Refer to *Silent Monitor* on page 446.
- what password the supervisor will enter on the supervisory telephone to gain access to the Silent Monitoring feature ([⊙] [*] [5] [5] [0]) (Default password: SILENT (745368)). Refer to *Silent Monitor password* on page 418.

Refer to the *Modular ICS System Coordinator Guide* for detailed information about using the feature and for descriptions of the display messages that occur during the process.

Change DNs

Installer password required

Change DNs allows you to change the directory number (DN) or internal number of a telephone.

Changing DN locks programming session.

Changing an individual DN locks the programming session into the Change DNs programming mode. After you finish and press [☎], re-enter the programming access code and the Installer password to continue with other programming.

Do not perform Startup again or all previous programming will be erased.

1. Use [Show] and the dialpad to identify the DN you want to change.
2. Use the dialpad to enter the new DN.

Featr settings

The following section describes how to configure features for individual telephones.

Backgrnd music

Background Music allows you to listen to music through your telephone speaker. A customer-supplied music source must be connected to the Integrated Communication System.

Press CHANGE to select the setting: N (No) or Y (Yes).

Refer also to *External music source (customer supplied)* on page 298.

On hold

On hold allows you to choose what a caller hears on an external line when the line has been put on hold.

Press CHANGE to select the setting: Tones, Music, or Silence.

- Tones provides a periodic tone.
- Music provides any signal from a source such as a radio connected to the ICS.
- Silence provides no audio feedback.

Receiver volume

Receiver volume allows you to specify whether the volume level of a handset receiver or headset will return to the system default level when a call is ended or put on hold, or whether the volume will remain at the level set at the individual telephone.

Use Show and CHANGE to select either: Use sys volume or Use set volume.

This feature is not available on some older telephones.

Camp timeout

Camp timeout delay allows you to assign the number of seconds before an unanswered camped call is returned to the telephone which camped the call.

Press CHANGE to select the setting: 30, 45, 60, 90, 120, 150, or 180 seconds.

Park timeout

Park timeout allows you to assign the number of seconds before a parked call on an external line returns to the originating telephone.

Press CHANGE to select the setting: 30, 45, 60, 90, 120, 150, 180, 300, or 600 seconds.

Park mode

The Call Park feature allows you to suspend a call. The call can then be retrieved at any system telephone by entering the unique retrieval code. Park Mode is the setting which determines how a retrieval code is assigned to parked calls.

Press CHANGE to select the way that the system will choose a Call Park code: Lowest or Cycle.

- When set to Lowest, the system will choose the lowest code that is available when the call is parked.
- When set to Cycle, the system will choose the codes in sequence, from lowest to highest, until all the codes have been used.

Trnsfr callbk

Transfer callback delay allows you to specify the number of rings before a callback occurs on a transferred call.

Press CHANGE to select the setting: 3, 4, 5, 6, or 12 rings.

Tips - *You can estimate the delay in seconds if you multiply the number of rings by six.*

DRT to prime

Delayed Ring Transfer automatically forwards unanswered external calls to a prime telephone after a certain period of time. This helps ensure that no external call goes unanswered.

Press CHANGE to select the setting: Y (Yes) or N (No).

Tips - *An operational prime telephone must be assigned before this feature can operate. A prime telephone is assigned to one or more external lines in* Line *programming.*

DRT delay

Delayed Ring Transfer delay allows you to specify the number of rings before a call is transferred to a prime telephone. For this feature to work, DRT to prime must be set to Y (yes).

Press CHANGE to select the setting: 1, 2, 3, 4, 6, or 10 rings.

Tips - *The DRT delay can be programmed only if DRT is activated. You can estimate the delay in seconds if you multiply the number of rings by six.*

Held reminder

When active, Held Line Reminder reminds you that a call at your telephone is still on hold. You periodically hear two tones from your telephone until you return to the call on hold.

Press CHANGE to select the setting: N (No) or Y (Yes).

Remind delay

Held Line Reminder delay allows you to choose the number of seconds before the Held Line Reminder feature begins at a telephone that has an external call on hold.

Press CHANGE to select the setting: 30, 60, 90, 120, 150, or 180 seconds.

Tips - *The Held Line Reminder delay can be programmed only if Held Line Reminder is activated.*

Directd pickup

Directed pickup allows you to answer any calls by specifying the internal number of the ringing telephone.

Press CHANGE to select the setting: Y (Yes) or N (No).

Tips - *Directed pickup is not to be confused with the Call Pickup Group feature in programming, which allows you to answer a call at any telephone within a specific group without specifying the internal number of the ringing telephone.*

Like Call Pickup Group, Directed pickup is useful when not all the telephones have been assigned the same lines, but you still want to allow your co-workers to answer a call on any external line from their telephones.

Page tone

You can choose whether a tone sounds before a page begins.

Press CHANGE to select the setting: Y (Yes) or N (No).

Page Timeout

The paging feature is automatically disconnected after a set length of time.

Press CHANGE to select the maximum number of seconds needed for a page: 15, 30, 60, 120, 180, 300, 600, 2700.

Daylight time

When this feature is turned on, your system will automatically switch between standard time and daylight savings time.

Press CHANGE, to select the setting: Y (Yes) or N (No).

Tips - *The hour falls back one hour on the last Sunday of October at 2:00 am. It advances one hour on the first Sunday of April at 2:00 am. This function should only be programmed by your installer.*

In regions where daylight savings time does not apply, make sure this setting is changed to N *(No).*

AutoTime&Date

You can program the Automatic Time&Date feature to enable the Norstar system to automatically update the time and date after a power failure.

Whenever the clock is out of sync by more than two minutes, as a result of a power failure or a loss of power, the first incoming call updates the clock automatically after two rings.

Note: CLASS trunks are required for this feature to work. Consult your customer service representative to determine if you have CLASS trunks.

This feature also allows automatic changing between North American daylight savings and standard time.
The Automatic Time and Date feature automatically overrides any manually-programmed changes to the time and date.

Note: The year is not included with the time and date information and must be programmed manually if the current year differs from the network time.

Press CHANGE to choose Y or N.

Call log

This feature allows you to specify how calls to a telephone are logged.

Press CHANGE to select either: Set or Line.

Set: enables call logging for all external calls directed to the telephone.

Line: enables call logging, on a per-line basis, for any line assigned to the telephone. **Note:** The line does not have appear on the telephone buttons. Use the Call Log Set feature under each telephone record to indicate which lines will log calls. Refer to *Call log set* on page 358.

Ensure that the user has adequate space for the expected call logs. Each user can also activate autobumping, to ensure that, when the log is full, old logs are deleted to allow room for new records.

WARNING: If you change this value on a configured system, all existing logs will be deleted.

Call log space

Call log space programming customizes how log space is allocated to telephones in the system.

`Reset all logs` allows you to reallocate the Call log space equally to all telephones in your system.

1. Press `YES` and use the dialpad to enter the space allocation for the Call log at each telephone.

   You must use a three-digit number (for example, 020 to give each set 20 spaces).

2. Press `YES` to accept the settings and end programming. The system automatically reallocates Log space.

   Press `NO` to keep existing settings.

Tips - *Use this heading only if you want to allocate an equal amount of log space to all the telephones in your system.*

If you want to assign specific log space to individual telephones, see the information under `Terminals&Sets` *in the Modular ICS 7.0 System Coordinator Guide.*

Reallocating Call log space may destroy Call log data at telephones that lose space.

There are 600 Call log spaces available in the system. There are no spaces allocated by default.

Changing the space allocation using Log Defaults defines the log space available to all telephones in the system. Any remaining unassigned log space is available in a log pool, and can be reallocated under `Terminals&Sets` *in* `Telco features`.

Host delay

Host delay allows you to assign the delay between the moment an outgoing line is selected to make an external call, for example, by lifting the receiver off the telephone, and the moment that Norstar sends dialed digits or codes on the line.

Press CHANGE to select the setting: 200, 400, 600, 800, 1000, 1200, 1400, 1600, 1800, or 2000 milliseconds.

Tips - *Host delay is provided to ensure that a dial tone is present before the dialing sequence is sent. Minimizing this delay provides faster access to the requested features.*

Link time

Link time allows you to specify the duration of a signal required to access a feature through a remote system.

Press CHANGE to select the setting: 100, 200, 300, 400, 500, 600, 700, 800, 900, or 1000 milliseconds.

For example, to program external dialing through a Centrex system, which requires a Link time of 400 ms, specify a Link time of 400.

Tips - *The Link time required depends on the requirements of the host switching system that must be accessed.*
Link is another name for Recall or Flash.

AlarmSet

Alarm set allows you to assign a telephone on which alarm messages appear when a problem has been detected in the system.

1. Use CHANGE and the dialpad to enter the internal number of the Alarm telephone.
2. Press Next to set the Alarm telephone to None.

   The default setting is 221.

Refer to *Alarm codes* on page 548 for details about reading alarms and troubleshooting with alarms.

Set relocation

Set relocation allows you to move any telephone to a new location within the Norstar system without losing the directory number, autodial settings, personal speed dial codes, and any programming for that telephone.

Press CHANGE to select the setting: N (No) and Y (Yes).

Tips - *It is advisable to activate* Set relocation *after the telephone installation and programming is complete. This provides you with more flexibility in testing equipment.*

Warning

If this feature is deactivated while a telephone is moved, the internal number and programming data for that telephone remain with the physical port on the ICS, and the telephone does not receive the original programming when it is reconnected elsewhere.

If you plug a new telephone into the original location before you reinstall the moved telephone, the programming moves to the new telephone and the moved telephone must be reprogrammed.

Msg reply enh

The Message reply enhancement feature allows for the message waiting indicator on analog telephones connected to an Analog Station Module (ASM) to be deactivated automatically if the reply call from the analog telephone to the designated direct-dial telephone is answered, no matter where the call is answered from by the user.

This feature also functions if the user invokes the Call Pickup feature to answer the reply call from the analog set. It does not, however, work with the Retrieve Parked Call feature.

Press CHANGE to select the setting: Y (Yes) and N (No).

Tips - *Direct-dial telephones are the only telephones that can send messages (using [✆] [1]) to analog telephones connected to an Analog Station Module (ASM). The direct-dial telephone must be the designated direct-dial set for the analog telephone receiving a message.*

Answer key

Up to eight answer DNs can be assigned per telephone. The Answer key setting in Featr settings allows you to determine what types of calls will alert at the telephone for the Answer DNs assigned to any telephone.

Press CHANGE to select the settings: Basic, Enhanced, and Extended.

On the Basic setting, answer keys do not ring for:

- Prime set call capture
- call forwarded calls
- other answer key calls
- priority calls
- voice calls
- ringing service
- callbacks

The Enhanced setting is the same as the Basic setting except:

- answer keys will ring for overflow call routed calls (special case of Prime set call capture)
- answer keys will not ring for line transferred calls

The Extended setting allows all call types to ring, except priority calls and voice calls.

Phantom DNs

A Phantom DN is the term used to describe a situation where a line is programmed to appear and ring on a telephone that does not physically exist. It allows you to create an Answer Key for the line that does not exist on an existing telephone. You would use a phantom DN in the case where you have taken a line out of service, such as a customer-response line,

but you still get calls to that number. To handle the calls, create an answer key using the phantom DN on the telephone where you want these calls to be taken.

Setting SWCA controls

On the system, under Feature Settings, **SWCA Cntl** you define how incoming calls get associated to System-wide Call Appearance (SWCA) buttons and how Hold will handle these calls.

Tips - *Since SWCA buttons use the Park feature, ensure that you have Park turned on for your system by specifying a Park prefix (*`Access codes`*), and a park timeout setting (*`System programming`*,* `Featr settings`*).*

Describing SWCA control functions

The `Auto Associate` settings determine if answered calls will automatically be associated to SWCA buttons, and for what duration.

- Manual on park: The user must press a SWCA button or enter a SWCA code to park a call on a SWCA code. When the call is retrieved, the SWCA code is available to another call.
- Manual LOC: The user must press a SWCA button or enter a SWCA code to park a call on a SWCA code. When the call is retrieved, the SWCA code is still assigned to the call, and remains assigned to the call until the call is terminated.
- Automatic LOC: The call is automatically associated with an available SWCA button/code. The user must still press the SWCA button or enter the SWCA code to park the call. The call remains assigned to that code until the call is terminated.

Auto ASSC I/C (Y, N): If set to Yes, calls that arrive assigned to the intercom button are automatically associated with a SWCA code. If the user presses [⌂] [*] [5] [2] [0] (park on next free SWCA code), the call parks on the assigned code.

The Invoke by Hold setting determines if a SWCA call put on Hold can be picked up from other extensions in the group. Note: These settings do not apply to the 7000 and 7100 digital phones and the Digital Mobility phone.

- If you want the call to be available to be picked up by other members of the groups when you put a call on Hold, set Invoke by Hold: to Y. A flashing indicator appears beside the SWCA key when the call assigned to that key is put on Hold.
- If you want calls to remain on Hold only at the telephone where the call is received, set Invoke by Hold: to N. Even if you set this field to N, users can still put selected calls on SWCA hold, by pressing a free SWCA key rather than the Hold key to camp the call.

SWCA hold I/C (Y, N): If set to Yes, calls that arrive on the intercom button, that are put on hold by the user, are automatically associated with a SWCA code and are available to other uses with access to that code once the call is parked. Note that Invoke by Hold must also be set to Yes for this feature to work.

Refer to the DN record section of this guide for information about assigning non-visible SWCA call groups (*Capabilities* on page 345). The *System Coordinator Guide* provides a section that describes how to add SWCA codes to buttons with indicators. The *SWCA User Card* explains how to use the feature.

Configuring SWCA controls

The following procedure describes the programming steps required to set up SWCA controls on your system.

1. Under Featr settings, press [Show]. The display shows Backgrnd music:.
2. Press [Next] until the display shows SWCA Cntrl:.
3. Press [Show]. The display shows Auto Associate:.
4. Press CHANGE to choose the Manual on park, Manual LOC or Automatic LOC.
5. Press [Next]. The display shows Auto Aassc I/C: N.
6. Press CHANGE to choose the Y or N option.

   Note: If you have TAT (Trunk anti-Tromboning) active on an MCDN private network, users must ensure that at least two SWCA assignments are available to handle calls if this setting is enabled.

7. Press [Next]. The display shows Invoke by Hold: N.
8. Press CHANGE to choose the Y or N option.
9. Press [Next]. The display shows SWCA hold I/C: N.
10. Press CHANGE to choose the Y or N option.

    Note: If you have TAT (Trunk anti-Tromboning) active on an MCDN private network, users must ensure that at least two SWCA assignments are available to handle calls if this setting is enabled.

11. Press [☎] to exit or [Next] to continue programming.

Overview about assigning SWCA codes to telephones

You can either assign SWCA codes as a feature to physical buttons with indicators on a telephone through Button programming (Terminals&Sets, User prefernces) or by assigning them to a memory key at the telephone.

You can also assign SWCA codes to the telephone that are not connected to a button on the telephone. This is performed using the **SWCA call group** heading under Capabilities for each telephone record. This type of assignment is particularly apt for 7000 and 7100 digital phones and to the Digital Mobility phone. Refer to *Capabilities* on page 345.

Non-button SWCA assignments are controlled by feature codes [✆] [*] [5] [2] [1] to [✆] [*] [5] [3] [6].

Refer to the *SWCA User Card* for details about using SWCA assignments.

Tip - *Software versions previous to MICS 7.0 use the feature range* [✆] [*] [5] [2] [0] to [✆] [*] [5] [3] [5].

Tip - *Users can assign calls to any SWCA code. However, they can only retrieve calls using codes that are assigned to their telephones. Auto assign conditions will only assign calls to codes assigned to the telephone receiving the call.*

CLID match

This setting determines the minimum number of digits that an external call must match to an existing system speed dial number in order for the system to offer a name display for the CLID prompt, if the system speed dial number is set up to display the caller name.

1. Under Featr settings, press [Show].
   The display shows Backgrnd music:.
2. Press [Next] until the display shows CLID match: 8.
3. Press CHANGE to select the a number from 3 to 8, or select None, if you do not require any number matching.
4. Press [☎] to exit or [Next] to continue programming.

Silent Monitor

You can monitor Hunt group members using a two-line display telephone that has been designated as a supervisor telephone.

You create the Silent Monitor feature capability by:

- determining how many system telephones will be allowed to be supervisors. (Refer to *SM sets* on page 480.)
- determining which telephones will be allowed to be supervisors. (Refer to the SM Supervisor field under *Capabilities* on page 345).
- determining the password that the supervisor enters after the feature code [✆] [*] [5] [5] [0] is entered to start monitoring Hunt group telephones. (Refer to *Silent Monitor password* on page 418.)

You have the choice of silently monitoring the conversation, or providing a tone to the other two parties to indicate that the line is being monitored. This setting is the same for all supervisor telephones. Refer to the process below to determine the setting.

1. Under Featr settings, press [Show]. The display shows Backgrnd music: N.
2. Press [Next] until the display shows Silent Monitor: Y.
3. Press CHANGE to select Y or N.
4. Press [☎] to exit or [Next] to continue programming.

Refer to the *MICS ICS 7.0 System Coordinator Guide* for information about using the Silent Monitoring feature.

Note: Some market profiles do not allow silent break-ins. In those markets Silent Monitor can be disabled (set to N) or a monitoring tone can be configured.

Direct-dial

Direct-dial allows you to dial a single system-wide digit that can be used to call a specific telephone, called a Direct-dial telephone. The most common example of a Direct-dial telephone would be telephone for an operator, a receptionist, or an attendant.

D-Dial1

For the direct-dial telephone, indicate whether it is an internal or external number. A total of five Direct-dial telephones can be programmed on the system.

Use [Show] and CHANGE to select the setting: Intrnl, Extrnl, or None.

Intrnl/Extrnl#

Enter the internal or external number that the system will automatically dial when someone enters the direct-dial digit.

Use [Show], CHANGE, and the dialpad to enter the telephone number.

The default number for the direct-dial telephone is 221, on the default three-digit DN system.

Line selection

If you assign an external number as a direct-dial telephone, you must indicate which line to use for the call.

Use [Next], CHANGE, and the dialpad to select the line for the external number.

Tips - *There is just one direct-dial digit for the entire system.*

The Norstar system cannot verify that the number you assign as an external direct-dial telephone is valid. Check the number before assigning it, then call the direct-dial telephone after you've assigned it to test it.

You cannot forward calls to any direct-dial telephone that is outside your Norstar system. For more information, refer to the Modular ICS 7.0 System Coordinator Guide.

CAP/KIM assign

Installer password required

This setting designates a telephone as an enhanced central answering position (eCAP). A maximum of five designated eCAPs can be installed in a Modular ICS system. The system can support more CAP configurations that are not designated in programming as eCAPs. Refer to the Tips below for information about the difference between OKIMs and eKIMs.

- Key indicator modules (KIMs). KIMs that are attached to 7316E digital phones that have been designated as eCAPs are called eKIMs.
  A 7316E+KIM which is not assigned with the DN of the telephone under CAP/KIM assgn, is called an ordinary KIM (OKIM). OKims support memory button programming, only.
- Legacy hardware: Existing systems may have 7324 digital phones attached to CAP modules.

The eCAP can be used to:

- monitor the busy/not busy and Do Not Disturb status of system telephones
- answer external calls on up to112 lines on a 7316E+eKIM and extend calls to other system telephones
- send up to 30 messages to other system telephones
- provide extra memory buttons for the telephones
- eKIMs can also support multiple appearances of a target lines and Hunt group designators.

Use [Show], CHANGE and the dialpad to enter the internal number of the telephone.

Press [Next] to scroll through the five CAP/KIM positions.

Tips - *A SAPs is not required for 7316E digital phones with four or fewer KIMs. If the KIMs are designated as eKIMS, you can only attach a maximum of four modules to a 7316E. Add a SAPS if more than four OKIMs are added to the 7316E.*

If you replace a legacy 7324+CAP unit with a 7316E+KIM, only the line assignments are copied to the new telephone, but not to the KIM. The telephone programming will revert to the default settings. If you move an OKIM from one 7316E to another, the KIM will retain memory button programming. However, if you move an eKIM from one 7316E to another, programming will not follow

Dialing Plan

Installer password required

The dialing plan acts as a system directive that determines how a number will be dialed out by the system. This feature works with enbloc dialing, and, therefore, is only used for PRI lines.

The Dialing Plan has these features:

- allows public or private routing for network calls
- private routing allows the choice of either the uniform dialing plan (UDP) or a coordinated dialing plan (CDP)
- allows enbloc dialing by buffering user-dialed digits until a complete DN has been dialed. Enbloc dialing is the default for PRI. However, you can specify Overlap Dialing where you require a break in a dialing sequence to wait for a PRI line-generated dialtone.
- provides the ability to map user-dialed digits to a service type on a Call by Call basis
- allows incoming calls to be routed according to the service type and the digits received

DN lengths (enbloc dialing)

The Private DN Length must be set to the number of digits users dial to reach other nodes in a private network. The Private DN Length parameter is used by the PRI trunk to determine when a complete number has been dialed. The PSTN DN Length Table is used by the PRI trunk to determine when a complete PSTN DN has been dialed. Entries in the DN Length table consist of two fields: Prefix and DN Length.

TIP - *You do not need to use a* Private DN Length *if you are using the coordinated dialing plan (CDP), as the system identifier is part of the set DN.*

Defining dialing plans:

At System prgrming/Dialing plan:

1. Press [Show]. Private Network:None displays.
2. If you are defining a dialing table for a private network, press [Show]. Refer to *Private networks* on page 452.

   If you are defining a dialing table for external (public) DNs for a network, press [Next]. Refer to *Public networks* on page 453.

Private networks

`Private network: None`

Choosing this setting turns off MICS private network functionality.

1. At `Type:None`, press [Next].

   `Priv DN len:4` displays.

2. Press CHANGE to choose a new private DN length. (3-14)

`Private network: CDP`

If your dialing plan needs to use steering codes to navigate to other networks, specify a coordinated dialing plan (CDP).

1. At `Type:None`, press CHANGE until `CDP` displays.
2. Press [Next]. `PrivNetID:1` displays.
3. Press CHANGE, and enter a new private network id.

Note: If you are specifying a private network that has been created using SL-1 (MCDN) lines, the private network id is part of the set DN (for instance, system A might have DNs from 3201 to 3299, whereas system B might have a DN range starting with 2, such as 2201 to 2299). However, you must enter a number, so enter the number that appears first on the set DNs.
This code is defined by the network coordinator and must be unique to each system.

4. Press [Next]. `Priv DN len:3` displays.
5. Press CHANGE to choose a new private DN length. (3-14).

Note: The Private DN length must match the DN lengths being used by the other systems in the network. This is what enbloc dialing uses to determine when the complete number has been dialed.

Private network: UDP

If your dialing plan will be using Location codes to navigate to other systems, specify a uniform dialing plan (UDP).

1. At Type:None, press CHANGE until UDP displays.
2. Press Next. PrivNetID:1 displays.
3. Press CHANGE, and enter a new private network id.
4. Press Next. Loc code:None displays.
5. Press CHANGE and use the dialpad to enter a location code.

Note: This code must be unique to your system.

6. Press Next. Priv DN len:3 displays.
7. Press CHANGE to choose a new private DN length. (3-14)

Note: The Private DN length must match the DN lengths being used by the other systems in the network. This is what enbloc dialing uses to determine when the complete number has been dialed.

Public networks

When you identify public DNs on a network, use the Dialing Rules to define any prefixes that need to be dialed out. The public network refers to connections to the public switching network (PSTN).

1. At Public Network, press Show.

   Pub DN lengths displays.
2. Press Next. PrivNetID:1 displays.
3. Press Show. Show prfix: displays.
4. Press ADD and enter a prefix.

5. Press OK to accept the prefix.
6. Repeat steps 4 and 5 until all the prefixes have been added.

Tip - *If you want to view the prefix list, at the Show Prfix: display, press* Next.

To remove a prefix, find the prefix, then press REMOVE.

Dial Timeout

Dial Timeout (interdigit timeout) specifies how long the ICS will wait between user-dialed digits. This value allows the ICS to determine when the user has stopped dialing. The value is programmed under System programing, Dialing Plan.

The user can also use the # key to tell the ICS that they are finished dialing. However, this is not usually required, except for international calls where the number of digits dialed for country codes varies.

With the display showing System Prgrming

1. Press Show then press Next until Dialing Plan displays.
2. Press Show then press Next until Dial timeout displays.
3. Press CHANGE to select a the timeout value (3, 4, 5, 6, 8, 10, 15) in seconds.

   Too small a timeout value forces the user to enter the digits very quickly, one after the other.

   Too large a value causes the system to wait for a long time after the last digit is entered before the call is dialed out.

For more information about non-PRI routing tables and destination codes, refer to *Routing service* on page 389.

Access codes

Installer password required

Access codes are used by the system to direct calls to the correct lines and destinations. If the codes conflict, some of the features on the system will not work.

The table of default settings can help you plan your access codes so there are no conflicts.

Digits assigned by default to settings

Digit	Use	Heading
0	direct-dial digit	Access Codes
1	Park prefix	Access Codes
2	the first digit of B1 DNs	Startup
9	line pool A access code Takes precedence over the External Line access code if there is a conflict.	Access Codes
— —	external line access code	Access Codes
— —	destination code	Routing Services

Line pool codes

Installer password required

This setting allows you to assign a line pool access code for each of the 15 line pools (A to O). These codes are used to specify the line pool you want to use for making an outgoing external call.

If your system is installed without expansion cards, the DN default is two digits. Therefore, B1 DNs will be from 21 to 52 and the B2 DNs are assigned from 53 to 84. The B2 DN range is 80 to 84. Therefore, the single digit 8 is not available for a line pool access code.

Use [Show], CHANGE, the dialpad, and OK to program the access code.

The default access code is 9 for Line Pool A, and None for Line Pool B to O.

For ISDN-PRI line pool settings, see *Line Pools* on page 474.

Tips - *The code can be one to four digits in length.*

A line pool access code can be the same as an external line access code. In this case, the line pool access code takes priority over the external line access code, and a line from the line pool is selected.

A line pool access code cannot conflict with:

- *the Park prefix*
- *the Direct-dial digit*
- *the first digit of any Received number*
- *the first digit of any DN (including the Auto DN or the DISA DN)*
- *the first digit of a destination code.*

To avoid a conflict, refer to the table of default settings in the description of External code.

Park prefix

Installer password required

The Park prefix is the first digit of the call park retrieval code that must be entered to retrieve a parked call. If the Park prefix is set to None, calls cannot be parked.

Press CHANGE to select the setting: **1** to 9, None, or 0.

Tips - *The Park prefix cannot be the same as:*

- *the Direct-dial digit*
- *the External Line access code*
- *the first digit of a DN*
- *the first digit of a line pool access code*
- *the first digit of a destination code*

If DN length is changed, and the changed DNs conflict with the Park prefix, the setting changes to None.

Tips - *Other programmable settings may affect which numbers appear on the display during programming. Although the numbers 0 to 9 are valid Park prefix settings, some may have been already assigned elsewhere by default or by programming changes. To avoid a conflict, refer to the table of default settings in the description of External code.* **-**

SWCA note*: If you want to use system wide access (SWCA) keys on your system, you must specify a valid Park Prefix to turn on the feature.*

External code

Installer password required

External code allows you to assign the external line access code. This code is used to allow model 7000 and 7100 Digital phones, analog telephones connected through analog trunks or through Analog Terminal Adapters (ATA2), and Digital Mobility phones, to access external lines.

Press CHANGE to select the setting: 0 to 9, or None.

Tips - *The external line access code cannot conflict with:*

- *the Park prefix*
- *the direct-dial digit*
- *the first digit of a line pool access code*
- *the first digit of a DN*
- *the first digit of a destination code.*

If DN length is changed, and the changed DNs conflict with the Park prefix, the setting changes to None.

Direct-dial

Installer password required

Direct-dial digit allows you to dial a single system-wide digit to call a specific telephone, called a direct-dial telephone, such as a receptionist's station.

Press CHANGE to select the setting: 1 to 9, None, or **0**.

Tips - *Another direct-dial telephone, an extra-dial telephone, can be assigned for each schedule in Services programming.*

The direct-dial digit cannot be the same as the first digit of:

- *a DN*
- *a line pool access code*
- *the external line access code*
- *the Call Park prefix*
- *the first digit of a destination code*

If DN length is changed, and the changed DNs conflict with the Park prefix, the setting changes to None.

Auto DN

Installer password required

For calls answered without DISA, no password is required to access the Norstar system. The Class of Service (COS) that applies to the call is determined by the COS for the trunk on which the user is calling.

1. Use CHANGE and the dialpad to enter the digits to be received from the auto-answer trunk.
2. Press CLR to set the Auto DN back to None.

Tips - *The length of the Auto DN is the same as the* Rec'd # length *specified in* System prgming*.The Auto DN is cleared if the Received number length is changed.*

The Auto DN cannot be the same as a line pool access code or a destination code.

DISA DN

Installer password required

For calls answered with DISA, the system presents a stuttered dial tone to prompt a caller to enter a valid password. The Class of Service (COS) that applies to the call is determined by this COS password.

Once a remote user is on the Norstar system, the DISA DN can be used to change the existing Class of Service. This gives you greater flexibility when you create access privileges. For example, you may want to have a shared DN for remote access and separate COS passwords with different dialing out privileges for individuals.

Use CHANGE and the dialpad to enter the digits to be received from the auto-answer trunk.

Press CLR to set the DISA DN to None.

Tips - *The length of the DISA DN is the same as the* Rec'd # length *specified in* System prgming*. The DISA DN is cleared if the Received number length is changed.*

The DISA DN cannot be the same as a line pool access code or a destination code.

PrivAccCode

Installer password required

If you have created a Private or Tandem network, you need to provide a specific code to access the network links.

1. Press Change and use the keypad to enter a code.
2. Press OK to save the code.

This code must not conflict with any other access code or call code within the system.

Assign this code as the destination code for the private line or line pool that connects to the next node in the network.

Carrier Codes

Installer password required

If you are routing calls with different carriers as you change schedules, you need to be able to define the access codes for each carrier you use.

A multi-digit Carrier Access Code (CAC) contains an Equal Access Identifier Code (EAIC) followed by a Carrier Identification Code (CIC). The CIC identifies the carrier to be used to handle the call. The Carrier Access Code table stores the CAC digit pattern that you define for your region.

In most cases it is not necessary to change the default values. The capability is there to modify overall patterns, if required.

- you can define up to five entries
- two entries will be pre-defined in North America, but you can remove these defaults
- each entry consists of an EAIC prefix (one to six digits) and a CIC length (one digit, 1 - 9)
- each entry is identified by the prefix digits themselves

This code becomes part of the External Number field in Route programming that will be used to access the carrier. Refer to *Adding a long distance carrier access code* on page 404.

1. From the `Access code` menu, press [Next] until you reach `Carrier Codes`.
2. Press [Show]. `Prfx:10` appears.
3. `Add` or `Remove` prefixes, as you require.
4. Press [Show]. `ID length:3` appears.
5. `Change` the length of the prefix, as you require.

This code must not conflict with any other access code or call code within the system.

Remote access

Remote access packages allow you to control the remote use of Norstar line pools. Create a remote access package by defining which of your system line pools will be accessible. You then assign the package to individual lines (using Rem line access), and to a particular Class of Service password (Remote pkg in COS passwords).

Rem access pkgs

Use [Show] and the dialpad to select the remote access package you want to program.

LinePool access

Press CHANGE to select the line pool access setting for each pool: N (No) or Y (Yes).

Remote page

Press CHANGE to select the remote paging setting for each pool: N (No) or Y (Yes).

Rem line access

Enter the number of the line which will be accessible by remote users.

L001 Rem pkg

Press CHANGE and enter the number of the remote access package remote users accessing the line will be able to use. Refer to the table below for a list of default settings.

Remote access packages defaults

Parameter	Square	PBX	Hybrid	Centrex	DID
Package 00	Prohibits remote access to line pools, Page, remote monitoring and administration. Cannot be changed.				
Package 01 Line pool access	Y for Pool A N for Pools B to O and PRI-A and PRI-B (as well as PRI-C and PRI-D on systems using Profile 1 or 4).				
Packages 02 - 15 Line pool access	N for Pools A to O and PRI-A and PRI-B (as well as PRI-C and PRI-D on systems using Profile 1 or 4).				

Tips - *You can use* COPY *and the dialpad to copy settings from one remote package to another.*

The line pool access display shows an alphabetic line pool identifier, followed by a numeric line pool access code in brackets, for example, PoolA (9):N. *If no access code has been identified, there is nothing between the brackets.*

For example PoolA ( ):N.

The line pool access code can be programmed under Terminals&Sets.

Remote package 00 *is the default setting and cannot be changed.*

You can define up to 15 remote access packages (01 to 15).

Rec'd # length

Installer password required

The Received number length setting allows you to change the number of digits received on auto-answer trunks. These digits are used to identify target lines, Auto DNs, and DISA DNs.

Press CHANGE to select the setting: 1, 2, **3**, 4, 5, 6, or 7. Then, press Next to make the change.

Tips - *The target line number (for example, line 052) and the Received number for the target line (for example,* Rec'd #: 123 *for line 052) are two different numbers.*

Tips - *The Received number length may be the same as the system DN length. However, network or central office constraints may require you to set it to some other value.*

Changing the Received number length causes all programmed received digits to be cleared.

DN length

Installer password required

This feature allows you to change the number of digits for all DNs. The maximum length is seven. The default, and minimum length, is **3**.

1. Press CHANGE to select the setting: **3**, 4, 5, 6, or 7.
2. Press Next to save the new DN length.

   The display shows Drop data calls?.
3. Press YES to save the new DN length.

   NO restores the original value.

Tips - *A DN length change, if required, should be the first programming change on a newly-installed Norstar system.*

Each increase in length places the digit 2 in front of any existing DN. For example, if DN 234 was increased to a length of 4, the new DN would be 2234.

If the DN length is changed so that a conflict is created with the Park prefix, external line access code, direct-dial digit, or any line pool access code, the setting for the prefix or code is changed to `None`*, and the corresponding feature is disabled.*

Do not change DN length immediately after a system startup.

You must wait for at least two minutes after a system startup before you change the DN length.

Data devices which use the B2 channel drop calls when the DN length is changed. Digital phones retain their calls because they only use the B1 channel.

The DN length change is completed within two minutes, depending on the size of the installed Norstar system. System response may briefly slow down during this time. You cannot re-enter programming during this time. If you enter the programming access code, the message `In use: SYSTEM` appears on the display.

Nat'nl length (profile 2, only)

Installer password required

This feature allows you to change the number of digits that the system will expect to see for a national telephone number.

1. Press CHANGE to select the setting: (default is 10).
2. Press YES to save the new DN length.

Make/Break (profile 2, only)

Installer password required

This feature allows you to change the ratio of your system.

1. Press CHANGE to select the setting to either 40/60 or 30/70.

BusName

Norstar will display the name of the calling party when it is provided both Private or Public ISDN PRI and BRI interfaces. The displayed name may include information such as the Receiving Calling Name, Receiving Redirected Name, and/or Receiving Connected Name. The outgoing name is the business name concatenated with the set name.

Tip - *The outgoing name is not supported on BRI.*

Refer to Feature assignment (CLID alignment) on page 357.

Network Name Display is an optional feature that is available based on the interface to which you are subscribed.

Network name display supported by protocol

Feature	Interface			
	NI PRI	DMS Custom PRI	NI BRI	SL-1
Receiving Calling Name	Supported	Supported	Supported	Supported
Receiving Redirected Name	Supported		Supported	Supported
Receiving Connected Name		Supported		Supported
Sending Calling Party Name	Supported	Supported		Supported
Sending Connected Name		Supported		Supported

Receiving and Sending Calling Party Name

Network name display allows the name of an incoming PRI/ BRI call to be displayed on the system telephone receiving the call.

- Calling Party Name with status of Private may be displayed on the Called Party telephone as `Private name`.
- If the incoming Calling Name is defined by the CO as a private name, then `Private name` appears on the answering telephone.
- If the Calling Party Name is unavailable, it may be displayed on the Called Party set as `Unknown name`.
- The system supports sending the calling party name, which is the Business Name and Set Name concatenated together, on calls originated by the Norstar system.
  The Set Name will only be sent if the OLI for the telephone is configured. See *OLI #* on page 343.

For information about programming your Feature assignment, see *Feature assignment (CLID alignment)* on page 357.

Receiving and Sending Connected Name

Outgoing calls record the Connected Name of outgoing calls. The Connected Name is stored and displayed on the system telephone. In order for this to work, you need to set the `Called ID` to `Yes`. See *Called ID* on page 359.

The system also supports sending the Connected Name with an outgoing call, which is the Business and Set Names concatenated together, with incoming calls. You can have the system block this display for specific PRI lines by setting the Send Name Display heading to N. Refer to *Send Name Display (PRI)* on page 524.

If the call is answered by a hunt group, the hunt group name is used instead of the set name.

The Connected Name is a transient display that appears for about three seconds.

Network Name Display interactions

Calling and Connected Name information (if available) is passed between trunks with Selective Line Redirection (SLR). Only Calling Name information is passed between trunks in cases where Direct System Inward Access (DISA) has resulted in tandeming of trunks.

Programming Network Name Display

The Business Name and the Set Name make up the information that is used for the outgoing Calling name or connected name.

Calling/connected name is only sent once the Business Name is programmed.

To program the Business Name, start with the display showing System prgming.

1. Press [Show].The display shows Hunt groups.
2. Press [Next] until the display shows BusName:.
3. Press CHANGE and use the keypad to enter a Business Name.
   You can enter a maximum of eight letters. It is recommended that you use a blank space for the last character to act as a separator between the Business name and Set name.

To program the Set Name start with the display showing Terminals & Sets.

1. Press [Show] and enter the set number of the telephone you would like to program.
2. Press [Show]. The display shows Line access.
3. Press [Next] until the display shows Name:.
4. Press CHANGE and use the keypad to enter a Set Name. You can enter a maximum of seven letters.
5. Other areas that must also be programmed include:

- the OLI number, see *OLI #* on page 343
- under Telco features the Call ID must be set to yes, see *Called ID* on page 359

Outgoing Name and Number Blocking

When activated, [✆] [8] [1] [9] blocks the outgoing name and number on a per call basis. When this feature is used, the call is flagged to the CO so that the name and number will not be presented to the person being called.

On analog and BRI trunks, a call blocking digit sequence is sent to the CO before sending the dialout digits. You can change this digit in a Norstar programming session and set it to the digit sequence recognized by the local CO for name and number blocking.

This programming is done in the main program heading `Telco Features`. To program the Name and Number blocking digit, start with the display showing `Telco features`.

Note: Step 1 through 3 are only for analog and BRI trunks.

1. Press [Show]. The display shows `VMsg ctr tel#s`.
2. Press [Next] until the display shows `ONN Blocking:`.
3. Press [Show]. The display shows `Tone:None.` You can choose `F78, (0-9), *, #.`
4. Press CHANGE to enter a new tone dialing Name and Number blocking digit sequence.
5. Press [Next]. The display shows `Pulse:None.` You can choose `F78, (0-9), *, #.`
6. Press CHANGE to enter a new pulse dialing Name and Number blocking digit sequence.

Call by Call service for PRI

Installer password required

Call by Call service selection allows a user to access services or private facilities over a PRI line without the need for dedicated facilities. The different services represent different types of access to the network. Various services are available depending on the chosen protocol. The list below identifies the supported services

Call by Call service selection is supported for the following protocols:

- National ISDN 2 (NI-2)
- DMS-100 custom
- DMS-250 (MCI, Sprint, Generic)
- AT&T 4ESS custom

The following Call by Call Services are supported:

Public	Public calls connect Norstar and a Central Office (CO). Both incoming (DID) and outgoing (DOD) calls are supported. Dialed digits conform to the standard North American dialing plan (E.164 standard).
Foreign Exchange (FX)	Foreign exchange service connects a Norstar site to a remote central office (CO). This provides the equivalent of local service at the remote location.
Tie	Tie lines are private incoming and outgoing lines that connect Private Branch Exchanges (PBXs) such as Norstar.

OUTWATS (Outward Wide Area Telecommunications)	This outgoing call service allows a Norstar user to call telephones in a specific geographical area referred to as a zone or band. Typically a flat monthly fee is charged for this service.
INWATS (Inward Wide Area Telecommunications)	This long distance service allows a Norstar user to receive calls originating from specified areas without charge to the caller. A toll-free number is assigned to permit reverse billing.
International INWATS	An international long distance service that allows a Norstar user to receive international calls originating from specified areas without charge to the caller. A toll-free number is assigned to permit reverse billing.
Switched Digital	This service provides premises-to-premises voice and data transport with call management and monitoring features.
Nine Hundred	This service is commonly referred to as fixed charge dialing.
Private	Private incoming and outgoing calls connect Norstar to a virtual private network. Dialed digits may conform to the standard North American dialing plan (E.164 standard) or the dialed digits may use a private dialing plan.

Norstar supported Call by Call Services by protocol

Norstar Service[a]	NI-2[f]	DMS-100 (custom)	DMS-250 (MCI, Sprint, Generic)	AT&T 4ESS
FX	FX	FX[b]		
Tie[c]	Tie	Tie	Tie	SDN (software defined network)
INWATS	INWATS	INWATS	Eight Hundred	Toll Free MEGACOM
International INWATS	Same as INWATS	Same as INWATS	Same as INWATS	International Toll Free Service
OUTWATS	IntraLATA OUTWATS OUTWATS with bands InterLATA OUTWATS	OUTWATS	PRISM	MEGACOM
Private		DMS Private[e]	VNET (virtual network)	
Switched Digital				ACCUNET[d]
Nine Hundred			Nine Hundred	MultiQuest
Public	Public	Public	Public	

a. A shaded box indicates that the protocol does not support the service.
b. DMS-250 Sprint and UCS support incoming FX only (i.e. Network-to-Norstar). DMS-250 MCI does not support FX.
c. NI-2 allows two Tie operating modes: senderized and cut-through. Norstar will only support senderized mode.
d. Rates greater than 64 kbps will not be supported.
e. Bell Canada VNET.
f. Not all service types may be supported by a switch type. For information, contact your service provider.

Programming Call by Call on PRI requires you to program various areas of the Norstar system:

- ☐ under `Line access`, assign the line pool
- ☐ under `Services`, in routing services section, assign which pool to use for routing and which service type service id, if required
- ☐ under `System programming`, specify the minimum and maximum values for the pools
- ☐ under `Hardware` choose PRI card and select the protocol

Line Pools

All lines in a PRI interface are in the same PRI line pool. This pool cannot contain any non-PRI lines. There is one PRI pool available for each PRI interface on the CSU.

Depending on the order that the cards are configured as PRI, Pool PRI-A represents lines 1 to 30, and Pool PRI-B represents lines 31 to 60. If both PRIs are connected to the same service provider and use the same protocol, lines 1 to 30 and 31 to 60 can be put in the same pool. There are four PRI pools available for profile 1 and 4 systems, PRI-A, PRI-B, PRI-C, PRI-D because these profiles support the off-core DTI module.

Programming Call by Call service selection

Programming the Norstar system for Call by Call Service Selection with a PRI interface requires

- provisioning a PRI card if a PRI card is not already a part of the system, on page 496
- selecting a protocol, on page 497
- programming incoming call routing, on page 498
- programming routes that use the PRI pools (under `Services`), see *Routing service* on page 389

PRI Call by Call Limits

PRI pool limits for Call by Call services allows you to configure limits for service types without interacting with the CO. This feature sets the minimum and maximum number of incoming and outgoing calls per service type for the PRI pool.

The number of active calls will be tracked so that whenever a call is being set up, a check will be made to determine if it will

be allowed. Calls will not be allowed if they exceed the maximum value for that service type or if they will use lines needed to maintain the minimum value of other service types.

The summation of the minimum values for incoming or outgoing PRI services cannot exceed the total number of lines in the PRI pool.

The maximum value for an incoming or outgoing PRI service cannot exceed the total number of lines in the PRI pool.

Programming Call by Call Limits

With the card set to PRI and the display showing System prgming.

1. Press [Show].The display shows Hunt groups.
2. Press [Next] until the display shows CbC limits.
3. Press [Show].The display shows the first pool (PRI-A, PRI-B, PRI-C, or PRI-D) that supports CbC routing.
4. Press NEXT to show the other pool, if it is available.
5. Press [Show].The display shows Service:.
   The service that is displayed depends upon the protocol.
6. Press NEXT to select a different service.
7. Press [Show]. If it applies, the display shows Min incoming:2.
8. Press CHANGE to enter a different number.
9. Press [Next]. If it applies, the display shows Max incoming:23.
10. Press CHANGE to enter a different number.
11. Press [Next]. The display shows Min outgoing:4.

12. Press CHANGE to enter a different number.
13. Press [Next]. The display shows Max outgoing:23.
14. Press CHANGE to enter a different number.

Release Reasons

Installer password required

This feature is useful for diagnostic purposes. It shows the reason why an ISDN call has been released. The Release Reason can be displayed as Simple or Detailed text. When the default None is selected, no release reasons appear on the set.

Release Reasons can be programmed under System prgrming. With the display showing System prgming.

1. Press [Next] until the display shows Release reasons.
2. Press [Show]. The display shows Text: None.
3. Select the text to be displayed as Simple or Detailed.

Note: If you selected Simple text, press [Next] for Cause code. The Cause code is for diagnostics. Make sure it is set to N.

Programming Hospitality Services

The Hospitality heading accesses the settings for the room and alarm information.

With the display showing System prgming press [Next] until the display shows Hospitality.

Room/desk information

Use this setting to assign set DNs to a specific room.

1. At the Hospitality heading, press [Show]. Room/desk info displays.
2. Press [Next]. Show set: displays.
3. Enter a room set number or press LIST and press [Next] until you find the DN of the set you want to assign to a room.
4. Press [Show]. Room #:None displays.
5. Press CHANGE and enter the room number, then press OK to accept the change.
6. Repeat step 5 for all the sets you want to assign.
7. Press [Next]. Adm pwd req'd:Y displays
8. Press CHANGE and choose Y or N, depending on your security requirements.

Call restrns

You can set up call restrictions based on room occupancy states. This setting affects the Room occupancy feature.

1. At the Hospitality heading, press [Show] . Room/desk info displays.
2. Press [Next]. Call restrns displays.
3. Press [Show]. Vacant:00 displays.
4. Press CHANGE and enter the filter that defines the restrictions for your hospitality system. Refer to *Filters* on page 349
5. Repeat steps 2 and 3 for the other room occupancy states.

   The table below shows an example of a call restrictions setup.

Room Occupancy	Filter	Description
Vacant	11	no calls allowed except 911
Basic	11	no calls allowed except 911 and internal extensions
Mid	12	no calls allowed except 911, 1800, 188 and internal extensions
Full	13	no call restrictions

Setting Service times

You can set the time when occupied rooms change from Service done to Service required. This setting affects the Room condition feature.

1. At the Hospitality heading, press [Show]. Room/desk info displays.
2. Press [Next] until Service time displays.
3. Press [Show]. Hour: 00 displays.
4. Press CHANGE and enter the hour (00 to 23).

   If the number is less than 13, the display shows AM. Press CHANGE to select PM, if required. Press OK to accept.
5. Press [Next]. Minutes: 00 displays.
6. Press CHANGE and enter the minutes (00 to 59).

Configuring alarms and expired alarms settings

Use this feature to create the alarm settings that will govern the alarm features for both the administrative and room sets.

1. At the Hospitality heading, press [Show]. Room/desk info displays.
2. Press [Next] until Alarm displays.
3. Press [Show]. Attn attempts:3 displays.
4. Press CHANGE until you find the number you want (1-5).
5. Press [Next]. Retry intrvl:4 displays.
6. Press CHANGE until you find the number you want (2, 4, 6, or 8).
7. Press [Next]. Attn duration: 15 displays.

8. Press CHANGE until you find the number of seconds you want (10, 15, 20, 30, 40, 50).
9. Press [Next]. Time format:12 hr displays.
10. Press CHANGE to choose either 12hr or 24hr.
11. Press [Next]. Expired alarms displays.
12. Press [Show]. Notify set:None displays.
13. Press CHANGE to enter a set DN to be notified.
14. Press [Next]. Use tone: N displays.
15. Press CHANGE to choose either Y (yes) or N (no).

SM sets

You can assign a maximum of 30 two-line display telephones to act as silent monitor telephones. These are the only telephones from which you can monitor Hunt group members with the silent monitoring feature.

1. At the System prgrming prompt, press [Next] until SM sets: displays.
2. Press CHANGE and enter the number of silent monitor telephones you want on your system. (Default: 5)

Network Services

The headings that appear under Network Services, depends on which profile the system is running.

Profiles 2 allows ETSI line connections, therefore, systems running this profile may have access to the two ETSI features. The service provided on the line by your service provider determines if these features are available.

Profiles 1, 2, and 4 support MCDN over PRI SL-1 lines.

ETSI: Network diversion and MCID Installer password required

Note: Profile 2,only.

If you are using Profile 2 for your system, and your service provider supports the features, you can configure your ETSI PRI lines to allow network diversion and/or MCID recording.

To program these features:

1. With the display showing System prgming press [Next] until the display shows Network Services.
2. Press [Show]. ETSI displays.
3. Press [Show]. Netwrk Redirection displays.
4. Press CHANGE to choose either Y (yes) or N (no).
5. Press [Next]. The display shows MCID.
6. Press CHANGE to choose either Y (yes) or N (no).

Network Call Diversion

Norstar Network Call Diversion (NCD) is a network function that allows forwarding and redirection of calls outside the Norstar network when using an ETSI ISDN line. Functionality is similar to that of External Call Forward (ECF).

NCD redirects calls using the same line on which they arrive. Call forward is efficient since there is no need for additional outside lines.

Forwarding calls externally from an extension requires the user to enter either a Destination Code or Line Pool Access Code, and the number to which calls will be forwarded.

Examples of NCD include:

- redirecting all calls from an extension to a mobile phone
- forwarding calls to an external destination (rather than to voicemail), when an extension is busy or the user is unavailable.

Feature description

NCD is available only over ETSI ISDN lines. It can be invoked when calls are presented to Norstar/BST extensions over ISDN lines. The user must program the selected extension.

NCD is integrated with the following existing Norstar Call Forward features:

- Call Forward Unconditional (CFU)—implemented on Norstar Call Forward All Calls (CFAC) [✆] [4], and Selective Line Redirection (SLR) [✆] [8] [4], also referred to as Line Redirection. This is programmable by the user.

- Call Forward on Busy (CFB)—implemented on Norstar Call Forward Busy.
- Call Forward on No Response (CFNR)—implemented on Norstar Call Forward No Answer.

Programming and restrictions

NCD features are accessed through existing Norstar features. Extensions requiring redirection must be programmed individually to either CFAC or SLR. CFB or CFNA must be set during programming. `Allow redirect` must be set to `Yes` for each extension, in `Terminals&Extns/Capabilities`.

Note: Any other programming applied to specific lines and extensions take precedence, for example `Restrictions(extns)` under `Terminals&Extns`.

NCD is used as long as the affected lines are ETSI ISDN, and the affected DID lines are accessible via ISDN lines. Incoming calls are diverted back to the ISDN. If NCD fails due to network errors, ECF is invoked. If ECF cannot be executed, the incoming call is routed to the prime extension for the line.

ATTENTION!

If a line is configured to appear on several extensions with redirection programmed, predicting which extension will divert the call is not possible. This should be considered during system configuration.

An extension with CFB, CFNA and CFAC programmed will give priority to CFAC for diversion.

Selective Line Redirection

Selective Line Redirection (SLR), also referred to as Line Redirection, is enhanced for use with digital lines and operates in conjunction with NCD.

Diversion by SLR takes precedence over diversion by CFAC. An SLR line cannot be diverted by CFAC. If the call arrives on an extension with SLR programmed, a ring splash will sound (if programmed).

For information on SLR restrictions refer to *Malicious call identification (MCID)* on page 485. For information on redirecting lines see Line Redirection in the *Modular ICS System Coordinator Guide*.

Programming Extensions

The User Interface for programming NCD is the same as for ECF.

Different types of Call Forward are available depending on the extension being programmed. Programming an extension to forward calls externally requires the user to enter a destination code or line pool number, in addition to the external phone number. Therefore, care should be taken to identify your network line types and record the available codes and line pools.

Enhanced Caller ID

When a telephone which has Call Line Identifier (CLID) active receives a redirected call due to NCD, the user will see the DN for the Calling Number. This is followed by an arrow icon (>) and the redirecting number. This is displayed for as long as the call is active (alerting or answered) at that telephone.

If the alerting extension is not the CLID extension for that line, the line appearance can be pressed to briefly display the information. Pressing [✆] [8] [1] [1] or INFO while the call is active invokes Call Info. Call Info on DPNSS displays the redirecting number and the reason for the redirection.

Note: When Norstar requests that an incoming call be redirected by the distance network, Norstar does not inform the network of the redirecting DN. In this case, the diverted-to party will not see the diverting party DN.

Malicious call identification (MCID)

The MCID feature allows the user to press [✆] [8] [9] [7] to have call information recorded on the central office system for an incoming call on a specific line (ETSI PRI lines, only).

The user must invoke the feature code either during the active call or within 30 seconds (time varies on different networks) after the caller hangs up. The feature will not work once the called party hangs up.

Note: This feature must be allowed in network programming for your PRI lines from your service provider.

The following information registers on the network:

- called party number
- calling party number
- local time and date of the invocation in the network serving the called user
- service provider option: calling party subaddress, if provided by calling user)

MCDN services (profiles 1, 2, 4) Installer password required

If your system is part of a private network using PRI SL-1 lines, you can determine the MCDN features that will be allowed by your system. These settings are described in detail in the networking section of this book. Refer to *MCDN trunk call features* on page 151.

- TRO: Trunk Route Optimization
- ICCL: ISDN Call Connection Limitation
- TAT: Trunk Anti-Tromboning

To program these features:

1. With the display showing System prgming press [Next] until the display shows NetworkServices.
2. Press [Show]. ETSI displays.
3. Press [Next]. MCDN displays.
4. Press [Show]. NetwkICCL displays.
5. Press CHANGE to choose either Y (yes) or N (no). Default is No.
6. Press [Next]. TRO displays.
7. Press CHANGE to choose either Y (yes) or N (no). Default is No.
8. Press [Next]. TAT displays.
9. Press CHANGE to choose either Y (yes) or N (no). Default is No.

Note: If you set NetwkICCL to yes, check the Max transits settings under Hardware to confirm the threshold at which you want the system to release the call rather than to continue cycling. Refer to *Max transits* on page 505.

Telco features

Currently the two features accessed under this heading are the settings for the voice mail connections for your system, and how to set up outgoing name and number blocking (ONN).

With the display showing System prgming press [Next] until the display shows Telco features.

VMsg ctr tel#s

If you subscribe to a voice message service outside of your local system, you can access it through your Norstar system. This includes centralized voice mail that is installed on another system within the private network to which your system is connected. Refer to *Central voice mail and Auto Attendant with Norstar* on page 166.

This setting specifies the external telephone numbers that are dialed by the Message feature to retrieve voice messages.

1. At the Telco Features prompt, press [Show]. Vmsg ctr tel# displays.
2. Press [Show]. VMsg center 1 displays.
3. Press [Show]. Use: Line displays.
4. Press CHANGE to select either Line or Routing tbl.

Tip - *If you choose* Routing tbl*, you must ensure that this number contains the routing code, and that the number is entered in the routing table and routed to the correct line pool.*

5. Press [Next]. `Tel#: No number` displays.

6. Press CHANGE and enter the telephone number for the voice message system.

7. Press [Heading] to move up a level.

8. Press [Next] to move to the next Voice message center.

9. Repeat steps 3 to 8 for however many voice message centers you want to enter.

Tips - *A telephone does not show that external voice messages are waiting unless* `Ext1 VMsg set` *is set to* `Y` *(Yes). The setting is in* `CLASS assignment` *under* `Terminals&Sets`.

You can program up to five voice message center numbers, but most systems require only one.

Outgoing Name and Number Blocking

Outgoing Name and Number blocking blocks the outgoing name and number on a per call basis when the user presses [✆] [8] [1] [9]

ONN blocking is cancelled with [✆] [#] [8] [1] [9]

When this feature is used, the call is flagged to the CO so that the name and number will not be presented to the person being called. Refer to *Outgoing Name and Number Blocking* on page 470 for more information.

1. At the `Telco Features` prompt, press [Show]. `ONN blocking` displays.

Programming the analog vertical service code (VSC)

1. Press [Show]. `Analog VSC` displays.
2. Press [Show]. `Tone:None` displays.
3. Press CHANGE to enter a new tone dialing Name and Number blocking VSC.

   The VSC for tone trunks can include a maximum of 10 digits consisting of the CO Pause ([*] [7] [8]), and digits 0-9, *, and #.
4. Press [Next]. `Pulse:None` displays.
5. Press CHANGE to enter a new pulse dialing Name and Number blocking VSC.

   The VSC for pulse trunks can include a maximum of 10 digits consisting of the digits 0-9. Pulse trunks do not support [*] [7] [8], * or #. The * is represented by 11 (two consecutive ones).

Programming the BRI VSC

1. Press [Show] until `BRI VSC` displays.
2. Press [Show]. `Code:None` displays.
3. Press CHANGE and enter a new BRI name and number blocking VSC. This entry can be up to 10 digits, consisting of CO Pause ([*] [7] [8]), digits 0-9, *, or #.

Setting up the modules for ONN blocking

To utilize ONN blocking, the CO is alerted by two methods, either the Vertical Service Code (VSC) or the suppression bit method. Each method depends on the type of trunk involved in placing the outgoing call.

Analog trunks use a dialing digit sequence called VSC. Most COs use the suppression bit method for ONN. You will need to use the VSC ONN if your CO does not support the suppression bit method. The VSC differs from region to region and must be programmed.

- Analog trunks with both tone and pulse dialing trunks can have separate VSCs.
- BRI trunks support one VSC.
- PRI trunks do not utilize the VSC.

The second method used to alert the CO is by a suppression bit packaged within the call setup message. BRI trunks can use either method.

Note: PRI trunks only support the suppression bit method of signalling the CO to block the outgoing Name and Number to the calling party, therefore, no additional programming is required.

When you program ONN blocking on a BRI module, you must indicate which method the BRI trunk will use. The module loop setting supports two ONN states. You must program the BRI loop to match the method supported by your service provider.

- If `SrvcCode` is programmed, then the VSC programmed under `Telco Features` is used.
- If `SuprsBit` is programmed, then the suppression bit will be packaged in the call setup message.

Program ONN blocking BRI loop state

The display shows the loops found on the BRI card.

1. Press [Next] to display the settings for individual loops on a BRI card.
2. At the `Loops` display, press next to display the first loop number.
3. Press [Show]. `Type:T` displays.
4. Press [Next] until `ONNblk:SuprsBit` displays.
5. Press `CHANGE` to toggle the BRI loop state setting from `SuperBit` to `SrvcCode`.
6. Repeat these steps to program ONN blocking BRI loop state for other loops, as required.

ONN call blocking notes:

- Set, line and set/line restrictions have no effect on digits programmed within the ONN feature code.
- Call back from the CO is disallowed with this feature.

Software keys

Some of the MICS system features require special pass codes, called software keys, to make the feature work. This section describes each of these options. To obtain the required Software key, call the Integrated Voice Response (IVR) Center at: **1-800-4NORTEL (667835)**, then use Express Routing Code **1599**.

ISDN-PRI

A software key is required so that you can configure a DTI card as a PRI card for Profiles 1, 3 and 4.

Not PRI software key is required for Profile 2 PRI lines.

MCDN

To create a private network using MCDN or tandem linking, you need a PRI key and a key specific to MCDN.

Not PRI software key is required for Profile 2 PRI lines.

Re-entering software keys.

Should the system be powered down for 72 hours or more, you will need to obtain and enter new software keys.

System Identification Number

Obtain the System ID (SysID) by pressing [⏀] [*] [*] [S] [Y] [S] [I] [D], or [⏀] [*] [*] [7] [9] [7] [4] [3] on any system programming telephone.

This information is also available by accessing `Software keys` in an Installer programming session:

1. Press [Show] The display reads `SysID:` followed by the unique System Identification Number.
2. Press [Next] to continue in `Software keys` or [☎] to exit.
3. Record the SysID in the Modular ICS *Programming Record*.

Call the Nortel Customer Response Center

1. Call the number given in the description of the software key you need.
2. Follow the voice prompts.
3. You will be given three separate numeric strings that contain eight digits each.
4. Record the Password keys in the Modular ICS *Programming Record*.

Entering the software keys

Keys are entered by accessing Software keys in a programming session.

1. Press [Show]. The display reads SysID:.
2. Press [Next]. The display reads Password keys.
3. Press [Show]. The display reads Key 1:_.
4. Enter the eight-digit password number for Key 1. Use BKSP to make corrections. The display reads Key 2:_.
5. Enter the eight-digit password number for Key 2.
6. Proceed as above until you have finished entering Key 3. The display reads Entry successful.
7. Press [Heading] until the display reads Software keys or press [☎] to exit.

Note: If the entry is unsuccessful, the display shows Invalid password. If this happens, re-enter the code or call Nortel Customer Response Center at 1-800-4-NORTEL (667835) for assistance.

Hardware

Hardware is where you view and change settings for cartridges installed in the ICS, Trunk Modules, Station Modules, and Data Modules.

Show module

Installer password required

The Show module setting automatically displays the modules connected to the system. Press [Next] to select the setting: KSU, Mod 03, Mod 04, Mod 05, Mod 06, Mod 07, Mod 08.

Note: MICS-XC has a maximum of 14 modules.

Cards on KSU

Installer password required

The Cards on KSU setting allows you to specify the type of Trunk Cartridges in the ICS.

Press [Next] to select the setting: T1, PRI, BRI-U4, BRI-U2, BRI-ST, E&M, DID, or Loop.

Note: KSU is also known as the Integrated Communication System (ICS).

- Loop is the default setting used for Loop Start and Call Information (CI) Trunk Cartridges.
- Select the T1 or PRI setting for DTIs cards.

Tips - *You cannot change this setting unless you first disable the Trunk Cartridge using* Module status *in* Maintenance.

Remember to enable the Trunk Cartridge once you have completed programming. See Module status on page 537 for details. The Trunk Cartridge slots in the ICS are numbered from right to left.

Once you specify the type of Trunk Cartridge in the ICS slot, press [Show] to display the range of line numbers for the lines on the Trunk Cartridge.

Provisioning the DTI card for PRI

The Cards on KSU setting allows you to specify the type of Trunk Cards in the ICS.

Note: Remember, you require a software password to activate PRI on your system.

Start with the display showing Hardware.

1. Press [Show]. The display shows Show module.
2. Press [Next]. The display shows Cards on KSU.
3. Press [Show]. The display shows Cd1-KSU:
4. Press CHANGE to view the different cards: Loop, T1, PRI, BRI-U4, BRI-U2, or BRI-ST.
5. Select PRI. The display shows Clear line data.
6. Select Y (Yes) to confirm your selection.

   For more information about provisioning cards see *Hardware* on page 495.

Selecting a protocol

Now that the DTI card has been provisioned as PRI (or is already part of the system) you can select a protocol.

With the display showing PRI

1. Press Show.
2. Press Next until the display shows Protocol:.
3. Press CHANGE to select a different protocol from the table that follows:

Protocol	Type
NI-2, DMS100, DMS250, AT&T4ESS	Public
SL-1	Private Note: This will not display unless you have entered the MCDN software code.

If you selected the NI-2 protocol, and you are using call-by-call services, you must specify how Norstar should handle the NSF (Network Specific Facilities) information element as follows:

- Press Show.
- Press Next until the display shows the default protocol NSF EXT: None.
- Press CHANGE to select another setting, based on your switch type, as shown in the following table:

Central Office	NSF Extension Setting
DMS100	None
Siemens ESWD, Lucent 5ESS	WATS
GTD5, DMS10	ALL

The Network Specific Facilities (NSF) information element is used to request a particular service from the network.

- When you select NONE, the NSF extension bit is not set for any service.
- When you select WATS, the NSF extension bit is set for unbanded OUTWATS calls.
- When you select ALL, the NSF extension is always set for all CbC services.

4. Press [Next]. If the display shows Clear Routes, press Y (yes) to confirm your selection.

BchanSeq

B-channel sequence allows you to select either ascending or descending. You need to choose the opposite setting of your service provider.

However, if all lines for two DTI cards (configured as PRI) are in the same PRI pool, then both cards must be set to use the descending B-channel sequence mode. As a result, the service provider must use ascending mode

Press CHANGE to select either ascending or descending.

Call-by-call routing

By default, incoming calls are routed based on the Called Party Number. You program the received number length to include however many digits your system requires. This many digits from the end of the called party number are then used as Received Digits to find a target line.

For example, the incoming calling party number is 800-555-1234. The received digit number length is 4. Therefore, 1234 is used to route the call.

Depending on the protocol and the service, alternate routing maps may be defined.

To change the incoming call routing for a service, with the display showing Protocol:, do the following:

1. Press [Next] until the display shows CbC Routing.

2. Press [Show]. The display shows FX:.

3. Press NEXT to display a different service.

Note: The display shows the first applicable service for the given protocol, in this example the service is FX.

4. Press CHANGE to change the mapping that is applied to incoming calls of this service type to obtain the received digits. In all cases, the received digits are used to find a target line or to activate Remote Access.

   None — No mapping is applied. The received number length determines the number of digits of the Called Party Number which will be used as received digits.
   If there is no called party number, which may occur with some FX calls, the call will ring at the incoming trunk Prime set.

   All — Allows you to define the received digits used for all calls with this service type, regardless of the called party number or service identifier (SID). For this option, all calls with this service type on this PRI will ring the same target line.

   Map table — Allows you to associate different received digits with different calls of this service type, depending on the call party number and/or the service identifier. Incoming calls that do not match any entry defined in the map table will ring at the prime set. Depending on the service type and the protocol, you may be able to map the called party number and the service identifier.

The following table shows the different options.

	Service				
Protocol	**FX**	**800**	**I-800**	**SDS**	**900**
NI-2	SID	CDN	n/a	n/a	n/a
DMS-100	SID	SID or CDN	n/a	n/a	n/a
DMS-250	SID	SID or CDN	n/a	n/a	SID or CDN
4ESS	n/a	CDN	CDN	CDN	CDN

Discon timer

Disconnect timer allows you to specify the duration of an Open Switch Interval (OSI) before a call on a supervised external line is considered disconnected.

Press CHANGE to select the setting: 60, 100, 260, 460, or 600 milliseconds.

Tips - *Disconnect Supervision is assigned to each line with the Trunk mode setting. See Trunk/Line data on page 361.*

This setting must match the setting for the line at the central office (CO).

This setting only appears for DTI (T1) and Loop Trunk Cartridges.

Answer timer

Answer timer allows you to set the minimum duration of an answer signal before a call is considered to be answered.

Press CHANGE to select the setting: 1, 2, 3, 4 or 5 seconds.

Note: This setting only appears for DTI (T1) and E&M Trunk Cartridges.

CO fail

Select the carrier failure standard used by your T1 or PRI service provider.

Press CHANGE to select the setting: TIA-547A or TR62411.

Tips - *This setting only appears for DTIs.*

Consult your T1 or PRI service provider for the proper setting.

I/F levels

Interface levels defaults to the ISDN loss plan setting.

Press CHANGE to select setting: ISDN, PSTN or ISD/TT interface levels.

Tips - *Find out if your Norstar system is connected to a central office (CO) with digital network loss treatment (ISDN I/F levels) or analog network loss treatment (PSTN I/F levels) by checking with your telecommunications service provider.*

The ISDN setting requires digital access lines (DAL) that have digital network loss treatment. On a DAL network, it is the PBX that administers the dB loss. DALs may have ISDN signaling or digital (such as T1 and so on) signaling. To have DAL network loss treatment on a line with digital signaling, you must contact your service provider.

The PSTN setting requires analog access lines (AAL) that have analog network loss treatment and digital signaling. On an AAL network, the CO administers the dB loss.

Tips - *The ISD/TT setting is only for T1 and PRI interfaces (MCI services only). ISD/TT provides a loss level that is similar to DAL except for certain analog connections where the DB level increases by three.*

Each loss plan uses a transmit objective loudness rating of -46 dB. The ISDN and ISD/TT loss plan uses a receive objective loudness rating (ROLR) of 51dB and the PSTN loss plan uses a ROLR of 48 dB.

Choosing the wrong setting may affect voice quality.

Framing

Framing allows you to select the framing format used by your T1 or PRI service provider.

Press CHANGE to select the setting: ESF (Extended Superframe) or SF (Superframe).

You must disable the Trunk Cartridge using Module status in Maintenance before you can change this setting. See Module status on page 537 for details.

Tips - *This setting only appears for DTIs. Consult your T1 or PRI service provider for the proper setting.*

SF or Superframe is sometimes known as D4.

Internal CSU

Internal CSU allows you to turn the internal T1 channel service unit on or off. The channel service unit gathers performance statistics for your T1 lines or PRI with public interface.

Press CHANGE to select the setting: On or Off.

You must disable the Trunk Cartridge using Module status in Maintenance before you can change this setting. See Module status on page 537 for details.

Tips - *This setting only appears for DTIs. Consult your service provider for the proper settings.*

You can view the performance statistics for your T1 lines in Maintenance under the CSU stats heading.

If you use an external CSU with your T1 lines, then set the internal CSU to off.

CSU line bld

CSU line build allows you to set the gain level of the transmitted signal.

Press CHANGE to select the setting: 0, 7.5 or 15 dB.

You must disable the Trunk Cartridge using Module status in Maintenance before you can change this setting. See Module status on page 537 for details.

Tips - *This setting only appears for DTIs that have the internal CSU turned on.*

Line coding

Select the standard used by your T1 service provider for encoding signals on the T1 lines.

Press CHANGE to select the setting: B8ZS or AMI.

You must disable the Trunk Cartridge using Module status in Maintenance before you can change this setting. See *Module status* on page 537 for details.

Tips - *This setting only appears for DTIs.*

Consult your T1 service provider for the proper setting.

Enable Trunk Cartridges

If you disable any Trunk Cartridges to perform programming, enable them now using Module status in Maintenance or your system will not function properly. See *Module status on page 537* for information about enabling Trunk Cartridges in Module status.

ClockSrc

Clock Source allows you to designate which of the system Digital Trunk Interfaces (DTIs) obtains the timing reference from the network, which the system synchronizes to. For more details about Clock Source settings, see *Clock Src* on page 517.

Max transits

If you allow ISDN Call Connection Limitation (ICCL) on your MCDN PRI system, you need to determine a threshold at which the system will release the call, rather than allow continued line tieups. This threshold is called Max(imum) transits. The default value for this feature is 31.

Modules

Installer password required

The Mod setting allows you to specify the type of module you wish to configure.

Tip - *MICS-XC can have up to 14 modules. Other MICS configurations have up to 8.*

Press CHANGE to select the setting: StnMod, ASM, TrunkMod or DataMod.

Note: ASM is the same as AEM, the analog station module.

StnMod

If a Station Module is selected and connected to the Modular ICS, no extra programming is required. Each Station Module represents 16 new DNs. For more information about lines and DNs used by the Station Module, see *Wiring charts* on page 260.

ASM

If an Analog Station Module is selected and connected to the Modular ICS, no extra programming is required.

The module defaults to:

- two extension lines are assigned
- Full handsfree is disabled
- handsfree is enabled
- all exchange lines are assigned to Ring
- Answer Keys cannot be assigned to the AEM
- allow Redirect

To verify the status of the module:

1. Navigate to `Maintenance` and `Module Status`.

   `Show module:` displays.

2. Enter the module number you want to verify.

   `8 extns on EM` displays.

3. Press STATE.

   `"x" sets busy` displays

To verify the status of each port:

1. Navigate to `Maintenance` and `Port/Extn stat`.

   `Show port:` displays.

2. Enter the port number you want to verify.

   The display shows the port number.

TrunkMod

TrunkMod setting allows you to configure the Trunk Cartridges in the Trunk Module.

Press CHANGE to select the setting: Loop, E&M, DID, BRI-ST, BRI-U2, BRI-U4 or PRI.

Loop is the default setting used for Loop start and Call Information (CI) Trunk Cartridges.

Tips - *You cannot change this setting unless you first disable the Trunk Cartridge using* Module status *in* Maintenance*. Remember to enable the Trunk Cartridge once you have completed programming. See Module status on page 537 for details.*

The Trunk Cartridge slots in the Module are numbered from left to right. Trunk Modules are numbered 3 to 4 for a midi, 3 to 8 for a maxi and a mega system.

Depending on your system configuration, off-core DTI, PRI, BRI-ST, BRI-U2, and BRI-U4 cards can only reside in certain trunk modules. In a midi system, the cards must be in trunk modules 3 or 4. In a maxi or mega system, the cards must be in trunk modules 7 or 8. The cards can reside in the ICS regardless of system size.

Once you specify the type of Trunk Cartridge in the ICS slot, press SHOW to display the line number range for the lines on the Trunk Cartridge.

TIP - *If you upgraded your system from a version previous to 6.0, note the line numbering changes, particularly for profile 2, from your previous system. Line number changes were introduced in version 6.0 software.*

Midi line number chart

	Line numbers							
Midi	**Loop**	**ST**	**U-2**	**U-4 (prfl 1)**	**DTI (PRI SL1-N12)**	**DTI (T1) (prfl 1)**	**E&M**	**DID** (prfl1)
Cd1 ICS Mod 2	1-4	1-8	1-4	1-8	1-23 (prfl 1) 1-30 (prfl 2)	1-24	NA	NA
Cd2 ICS Mod 2	31-34	31-38	31-34	31-38	31-53 (prfl 1) 31-60 (prfl 2)	31-54	NA	NA
Cd1 Mod 04	61-64	61-68	61-64	61-68	61-83 (prfl 1)	61-84	61-64	61-64
Cd2 Mod 04	69-72	69-76	69-72	69-76	NA	NA	69-72	69-72
Cd3 Mod 04	77-80	77-84	77-80	77-84	NA	NA	77-80	77-80
Cd1 Mod 03	85-88	85-92	85-88	85-92	85-107 (prfl 1)	85-108 (prfl 1)	85-88	85-88
Cd2 Mod 03	93-96	93-100	93-96	93-100	NA	NA	93-96	93-96
Cd3 Mod 03	101-104	101-108	101-104	101-108	NA	NA	101-104	101-104

Target lines: 157-284
Note: Off-core DTI uses line numbers for all three card positions in whichever module (3 or 4) it is installed in.

Maxi/Mega line number chart

	Line numbers							
Maxi/ Mega	**Loop**	**ST**	**U-2**	**U-4 (prfl 1)**	**DTI (PRI SL1-N12)**	**DTI (T1) (prfl 1)**	**E&M**	**DID**
Cd1 ICS Mod 2	1-4	1-8	1-4	1-8	1-23 (prfl 1) 1-30 (prfl 2)	1-24	NA	NA
Cd2 ICS Mod 2	31-34	31-38	31-34	31-38	31-53 (prfl 1) 31-60 (prfl 2)	31-54	NA	NA
Cd1 Mod 08	61-64	61-68	61-64	61-68	61-83 (prfl 1)	61-84	61-64	61-64 (prfl 1)
Cd2 Mod 08	69-72	69-76	69-72	69-76	NA	NA	69-72	69-72 (prfl 1)
Cd3 Mod 08	77-80	77-84	77-80	77-84	NA	NA	77-80	77-80 (prfl 1)
Cd1 Mod 07	85-88	85-92	85-88	85-92	85-107 (prfl 1)	85-108 (prfl 1)	85-88	85-88 (prfl 1)
Cd2 Mod 07	93-96	93-100	93-96	93-100	NA	NA	93-96	93-96 (prfl 1)
Cd3 Mod 07	101-104	101-108	101-104	101-108	NA	NA	101-104	101-104 (prfl 1)
Cd1 Mod 06	109-112	NA	NA	NA	NA	NA	109-112	109-112
Cd2 Mod 06	113-116	NA	NA	NA	NA	NA	113-116	113-116
Cd3 Mod 06	117-120	NA	NA	NA	NA	NA	117-120	117-120
Cd1 Mod 05	121-124	NA	NA	NA	NA	NA	121-124	121-124
Cd2 Mod 05	125-128	NA	NA	NA	NA	NA	125-128	125-128

Maxi/Mega line number chart (Continued)

	Line numbers							
Maxi/ Mega	**Loop**	**ST**	**U-2**	**U-4 (prfl 1)**	**DTI (PRI SL1-N12)**	**DTI (T1) (prfl 1)**	**E&M**	**DID**
Cd3 Mod 05	129-132	NA	NA	NA	NA	NA	129-132	129-132
Cd1 Mod 04	133-136	NA	NA	NA	NA	NA	133-136	133-136
Cd2 Mod 04	137-140	NA	NA	NA	NA	NA	137-140	137-140
Cd3 Mod 04	141-144	NA	NA	NA	NA	NA	141-144	141-144
Cd1 Mod 03	145-148	NA	NA	NA	NA	NA	145-148	145-148
Cd2 Mod 03	149-152	NA	NA	NA	NA	NA	149-152	149-152
Cd3 Mod 03	153-156	NA	NA	NA	NA	NA	153-156	153-156

Target lines: 157-284 (expanded: 157-380)
Note: Off-core DTI uses line numbers for all three card positions in whichever module (7 or 8) it is installed in.

BRI card

Installer password required

Loop

The display shows the loops found on the BRI card.

Press [Next] to display the settings for individual loops on a BRI card.

Type

Press CHANGE to select the loop type.

- If the card type is BRI-ST, the loop type can be S, or T.
- If the card type is BRI-U2 or BRI-U4, the loop type can be LT or NT.

The BRI card must be disabled in Module status before this setting can be changed.
You can change the setting if the card has not yet been installed in the ICS slot.

Lines

There are two lines for each T or NT loop.

Loop	Default lines
201	001-002
202	003-004
203	005-006
204	007-008
225 (profile 1, 3 and 4); 231 (profile 2)	031-032
226 (profile 1, 3 and 4); 232 (profile 2)	033-034
227 (profile 1, 3 and 4); 233 (profile 2)	035-036
228 (profile 1, 3 and 4); 234 (profile 2)	037-038

No SPIDs assignd

T and NT loops can be assigned a system profile identifier (SPID) as supplied by your service provider. No SPIDs are assigned by default.

When the loop type is T, calls on the loop are handled for a network connection only. If any other ISDN equipment is connected to the loop, it must be configured as an S loop to ensure proper call handling.

1. Press ADD and enter the first or second SPID assigned to the loop.
   If there are two SPIDs already assigned to the loop, ADD will not appear until one is removed.
2. Press REMOVE to clear a SPID.

Note: Profile 2 loops do not require SPIDs.

of B-channels

Press CHANGE to select the number of B-channels that are associated with the SPID: 1 or 2.

When you order an ISDN capability package that supplies two B-channels, you may receive one or two SPIDs from your service provider.

- If you receive one, it usually means you will configure the SPID to use two B-channels.
- If you receive two, it usually means you will configure each SPID with one B-channel. Check with your service provider if you are not sure about the proper configuration.

Network DNs

1. Press Show to display the DNs which are used with the SPID.
2. Press ADD and enter the appropriate number to assign additional Network DNs to the SPID.

The Modular ICS can have a maximum of 128 Network DNs for the system. There is no limit to the number of Network DNs for each SPID, but you cannot exceed the limit of 128 Network DNs for the system.

If the Network DN you try to enter is already assigned to a SPID with a call type of Both, you will not be able to assign the DN again.

If the Network DN you enter is already assigned to a SPID and the call type is Voice or Data, it will be automatically programmed with the unused call type. For example, if the DN has Call type set to Voice in the previous SPID assignment, it will be automatically set to handle Data calls when the same DN is added to the other SPID.

Call type

Press CHANGE to select the call type of the Network DN: Voice, Data, or Both.

CHANGE will not appear if the Network DN is already in use by the system and the call type will be automatically programmed with the unused call type. For example, if the DN has Call type set to Voice in a previous SPID assignment, it will be automatically set to handle Data calls when the DN is entered the second time.

Tips - *If our service provider does not specify the call type for each Network DN, it is probably available for both voice and data. Check with your service provider if you are not certain about the proper configuration.*

D-packet servce

1. Press Show to view and program D-packet service for T or NT loops. You can have two D-packet service configurations for each BRI card.
2. Press CHANGE to turn D-packet service for this loop on (Y) or off (N).

Tips - *An LT loop must already be assigned.*

Lp

1. Select the S loop (for BRI-S/T cards) or LT loop for BRI-U2 or BRI-U4 cards that supports the D-packet service.
2. Press CHANGE to move through a list of the loops which are available on this card.

Note: If only one loop is available, you will not see CHANGE.

TEIs

Press [Show] to view and program the Terminal Endpoint Identifiers (TEIs). Each TEI is supplied by your service provider and is associated with an ISDN D-channel packet device.

No TEIs on loop

Press ADD to program up to eight TEIs to this loop.

Sampling

Press CHANGE to select the sampling used by an S loop:

- Fixed — select if two or more S-interface devices use the loop and the length of the loop is less than 200 m (650 ft.).
- Adaptve — select if two or more S-interface devices use the loop and the length of the loop is greater than 200 m (650 ft.), select Adaptve.

If one S-interface device is using the loop, the length of the loop can be up to 1000 m (3,250 ft.) and the rate should be set to Adaptve.

The BRI card must be disabled under Module status in Maintenance programming, before you can change this setting. You can change the setting if the card has not yet been installed in the ICS slot.

DNs on Loop

Installer password required

Press [Show] to view and program the ISDN DNs assigned to the loop.

Assign DNs

1. Press [Show] and enter the ISDN DN you wish to assign to this loop, or press SCAN to move through a list of DNs already assigned to the loop.

   The display shows:

   - Availabl, Assigned — assigned to this loop
   - *Lpnnn* — assigned as the default DN of another loop
   - Lpnnn — assigned to another loop

2. Press LIST to view the DNs assigned as ISDN DNs.

   The default ISDN DN range is 667-696 for systems updated from versions previous to 7.0, and 669-698 for new 7.0 systems.

3. Press CHANGE to assign the DN to the loop or to remove it.

Loop DN

Press CHANGE to move through the ISDN DNs you have assigned to the loop.

This will assign the main ISDN DN to the loop.
You can also set Loop DN to None.

Clock Src

Installer password required

Systems with digital interfaces need to synchronize to the network in order to function. Synchronization is performed in a hierarchical way, where each device/switch obtains the network clock from the device/or switch above it in the synchronization hierarchy and passes the network clock to the device/switch below it in the synchronization hierarchy. The synchronization levels are referred to as strata.

Norstar systems are stratum 4E equipment and are usually used as termination points in a network.

For each on-core DTI, choose one of the following settings:

- **Primary reference**: The DTI obtains the timing reference from the network, to which the system synchronizes. This is the default value for the DTI in slot 1 in the ICS. If the system is configured with a DTI card that has been configured as PRI, the setting should be set to `Primary`.
- **Secondary reference (`Secndry`)**: The DTI acts as a standby reference. If there are excessive errors on the primary reference T1 link, or the DTI designated as primary reference fails, this DTI will obtain the timing reference from the network, which the system synchronizes to. This is the default value for the DTI in slot 2 in the ICS.
- **Timing master (`TimeMst`)**: The DTI does not obtain timing from the network, but transmits the systems timing to equipment connected to it.

WARNING: An off-core DTI needs to be left on free run

Tips - *If a BRI card becomes clock source, it will have up to four clock sources available (T, S, U-NT, NT loops only). Only when all four clock sources have an alarm will the card cause a switch to the secondary or hold-over state.*

BRI -T, S, and U-NT interface loops may be autonomously powered down by the network. This will be treated as a loss of clock source on that loop.

The installer should ensure that clock source loops are either not powered down or are among the last to be powered down.

If BRI cards are used only for S-loops, a Service Card is required only if the DTI is T1. However, a Services Card is recommended when a T1 is not used, since the card improves clock accuracy and performance.

If BRI cards are used off-core, they still require a connection to the network, which requires the SC, and an on-core digital clock source.

For more information about network synchronization, consult the appropriate private digital network synchronization standards.

The following illustrations show some typical network configuration and the appropriate clock source settings for your DTIs.

Norstar connected directly to the service provider in a T1 network

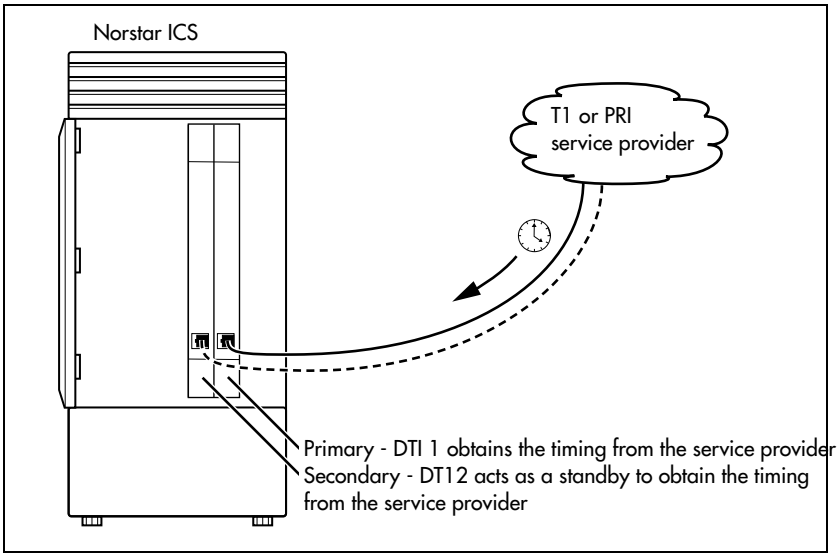

Norstar connected to another switch or MUX in a T1 or PRI network

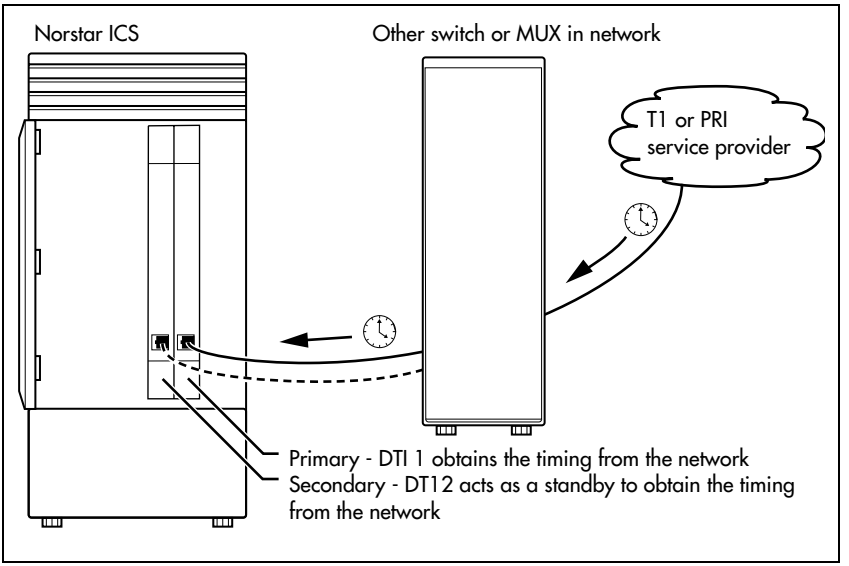

Norstar connected to another switch in a closed T1 or PRI network

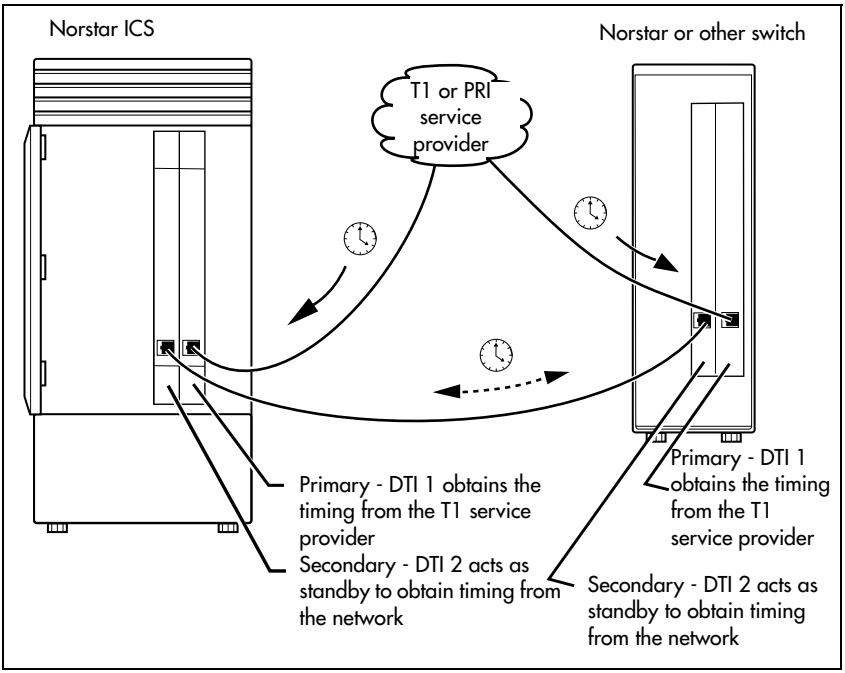

Norstar connected in a series of switches in a T1 or PRI network

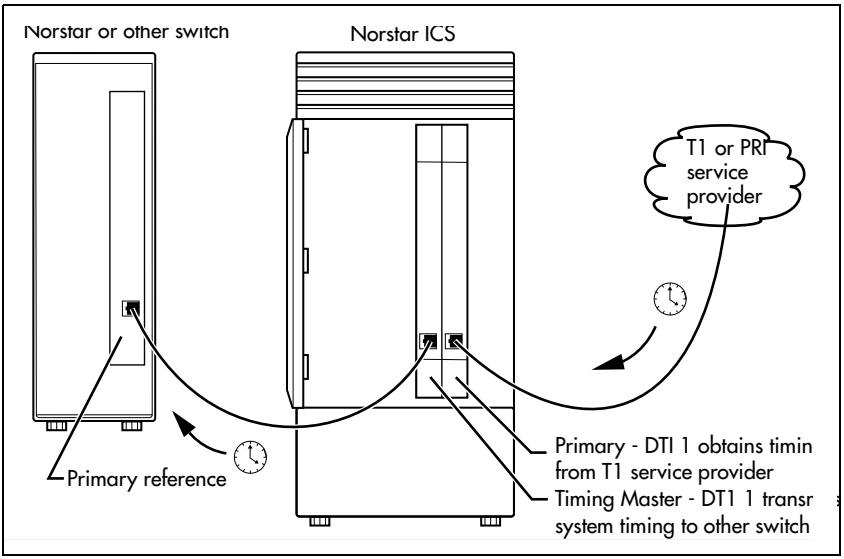

Norstar connected by a T1 link to another switch in an analog network

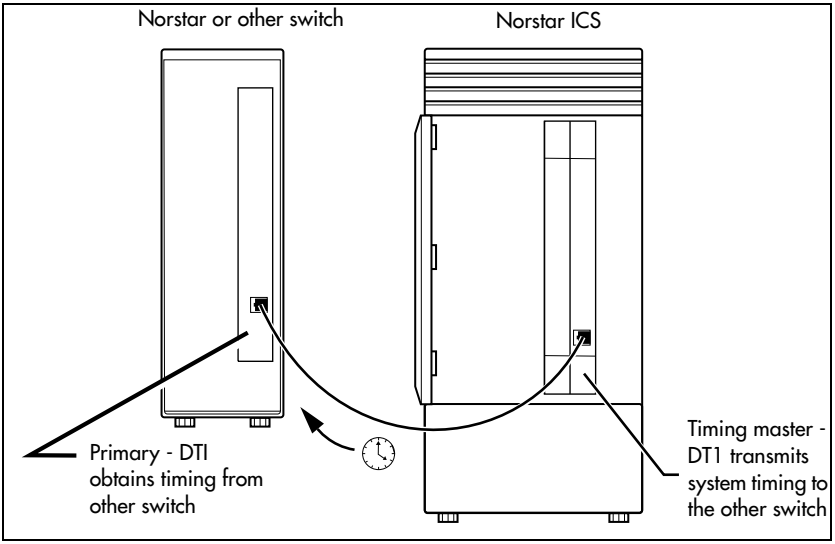

Setting the clock source for DTIs and PRI

Changing clock source may disconnect calls.

Changing the clock source for your system may cause your system to restart itself, resulting in dropped calls. Choose a suitable time to change the clock source and use the Page feature to inform people of possible service disruptions.

Start with the display showing `Hardware`.

1. Press [Show].
2. Press [Next]. The display shows `Cards on KSU`.
3. Press [Show].

4. Press [Next] until the display shows the card you want to view.

5. Press [Show].

6. Press [Next] until the display shows `ClockSrc`.

7. Press `CHANGE` to toggle the setting.

8. Press [☎] to exit or [Next] to continue in `Hardware`.

Tips - *In most T1 network configurations, you need one DTI or DTI card configured as PRI in your ICS to act as a primary reference. The only application where you might not have a DTI or a DTI card configured as PRI designated as primary reference is in a network where your Norstar system is connected back-to-back with another switch using a T1 link. If the other switch is loop-timed to your Norstar system, your DTI or DTI card configured as PRI can be designated as a timing master.*

Tips - *(continued) If your Norstar system has two or more DTIs, you cannot assign more than one DTI as primary reference or all of the DTIs as secondary reference.*

You can only have one primary reference and one secondary reference per system. See T1 or ISDN-PRI configurations for more information.

T1 or ISDN-PRI configurations

The following tables indicate proper and improper T1 or ISDN-PRI configurations:

Valid digital trunk configurations

	Option 1	Option 2	Option 3
Card 1	T1 or PRI	T1 or PRI	BRI-ST, BRI-U2, BRI-U4
Secondary Card 2	T1 or PRI	BRI-ST, BRI-U2, BRI-U4	BRI-ST, BRI-U2, BRI-U4

Invalid digital trunk configuration

	Option 1
Primary Card 1	BRI-ST, BRI-U2, BRI-U4
Secondary Card 2	T1 or PRI

Valid mixed trunking configuration

	Option 1	Option 2
Primary Card 1	T1 or PRI	BRI-ST, BRI-U2, BRI-U4
Card 2	Analog	Analog

Invalid mixed trunking configuration

	Option 1	Option 2
Card 1	Analog	Analog
Secondary Card 2	T1 or PRI	BRI-ST, BRI-U2, BRI-U4

Invalid configurations will raise an alarm. In these invalid configurations, digital links are likely to suffer errors, slips, etc.

Send Name Display (PRI)

Installer password required

Profiles 1 and 4 only.

PRI cards with SL1, NI-2, DMS100, or DMS250 protocols can be configured to send or block the business name and OLI on the call information. If this setting is set to Y (Yes), the system sends the Business name and the OLI defined for the telephone. Set this feature to N if Call Display is not supported by the terminating switch.

Start with the display showing Hardware.

1. Press [Show].
2. Press [Next]. The display shows Cards on KSU.
3. Press [Show].
4. Press [Next] until the display shows the card you want to view.
5. Press [Show].
6. Press [Next] until the display shows SendName Disp:.
7. Press CHANGE to select N (No Business name or OLI sent with call) or Y (Yes: Business name and OLI sent with call).
8. Press [☎] to exit or [Next] to continue in Hardware.

DataMod

Installer password required

Mod XX:DataMod

DataMod allows you to configure the settings for any data modules you may have on your system.

Type

The display shows the type of data module selected.

Maintenance

Use Norstar Maintenance to help you understand and diagnose system problems that occur on your Norstar system.

Maintenance includes settings to determine how the system will deal with T1 digital lines. It also provides a means for provisioning and testing digital lines.

The Maintenance section of programming has these headings.

System version	displays the version number of the system processor
Port/DN status	allows you to check and change the status of ports in your system
Module status	allows you to check and change the status of modules in your system
Sys test log	displays a list of test results, event messages, and alarm codes
Sys admin log	displays a list of system initialization sessions, invalid password attempts and password changes
Network evt log	displays a list of events and alarms
Provisioning	allows you to add or remove individual T1 lines, PRI lines, and BRI loops in and out of service
Tests	allow you to test incoming T1 signals to evaluate transmission quality, the connection between the ICS and telephones, and the connection between a DTI (configured as PRI) or BRI Card and the network
CSU stats	displays T1 performance information supplied by the Channel Service Unit
Link status	allows you to view status of b-channels on PRI

You can run a Maintenance session from any working two-line display telephone.

Tip - *Only one person at a time can access a Maintenance session.*

Photocopy the Maintenance records found in the Programming Record, and record the information the session provides.

Beginning a Maintenance session

1. Release all calls on your telephone.
2. Press [⌂] [*] [*] [C] [O] [N] [F] [I] [G] which is the same as [⌂] [*] [*] [2] [6] [6] [3] [4] [4]. `Password:` displays.
3. Enter the Installer password. `Terminals&Sets` displays. Three triangular indicators ▷ appear on the vertical display between the rows of buttons.
4. Place the programming overlay over the buttons pointed to by the indicators ▷.
5. Press [Next] until the display shows `Maintenance`.

System version

System version allows you to note the version number of the System Processor (SP) software, which resides in the Feature Cartridge.

Use the SP version number to determine whether you have the latest software release, and to trace a software fault if one occurs.

For instance:

- SP version number can indicate a Feature Cartridge incompatibility.
- SP and telephone version numbers can indicate a telephone version incompatibility.
- SP and functional terminal version numbers can indicate a functional terminal incompatibility.

Checking the version of the system

To check the version number, start with the display showing `Maintenance`.

1. Press [Show]. `System version` displays.
2. Press [Show].

   The display shows the version number of the SP.

3. Write the SP version number on the appropriate Maintenance record.
4. Press [Heading]. `System version` displays.

Port/DN status

Port/DN status allows you to:

- identify any device or line connected to the system
- check the version number of a device for compatibility with the system, for instance for an analog terminal adapter (ATA).
- check the state of a device or line, for example, idle or busy
- disable or enable a device
- determine which port number corresponds to each DN
- determine the port number of a malfunctioning device
- determine if a malfunctioning device is incompatible with the Norstar system
- disable a device before replacing it

Tips - *You cannot disable the telephone from which you are accessing the Maintenance session. If you try to do this, a message appears on the display and you hear an error tone. If you want to disable that particular telephone, conduct the Maintenance session from another telephone.*

Pick a suitable time to disable devices

Wait until after regular user hours to disable devices to cause the least disruption to your customers.

Do **not** enable or disable ports at the following times:

- during the first two minutes after Startup programming
- before fiber cables are connected

If you do so, incorrect ports may be enabled or disabled. To recover from this, disable, then enable, the affected modules using Module status.

Port/DN status allows you to check lines and devices on the system. Although the following procedures describe how to check devices, you can use the same procedures to check lines.

Lines can only be disabled in Module status.

Identifying a connected device

Installer password required

Start with the display showing System version.

1. Press [Next]. Port/DN status displays
2. Press [Show]. Show port: displays
3. Enter the port number of the device, or press DN, then enter the directory number of the device. The display shows device information, as illustrated in the following sample device identification display. This identifies the device connected to the B1 channel.
4. If there is an add-on device attached to a Norstar telephone, such as a central answering position module or a Busy Lamp Field, press [Show] to display the add-on device.
5. Press >B2 to display the device connected to the B2 channel.
6. Press [Heading] until the display shows Port/DN status.

Displays

Sample device identification display

P104 7316E 224 DEVICE >B2 STATE	This sample display indicates that port 104 has a 7316E digital phone whose DN is 224. Press DEVICE to see the device attached to the port.

The following table lists some of the device types that may appear on the Norstar device identification display.

Explanation of device type

Display	Explanation
7100	7100 digital phone
7208	7208 digital phone
7310	7316 digital phone
7316E	7316E digital phone
7324	7324 telephone (legacy Norstar telephone)
DMC prtb	Digital Mobility phone (all models)
RAD	Remote access device
1: CAP ... 2: CAP 2	CAP module attached to an M7324 telephone. (legacy Norstar hardware)
KIM1 ... KIM 9	KIM attached to a 7316E digital phone
ATA	analog telephone attached to an analog terminal adaptor or to an analog station module
BLF	Busy Lamp Field

Checking the device version number

Installer password required

From the Norstar device identification display:

1. Press VERSN (if it is available).

   The display shows the version number of the device.

2. Write this number on the appropriate Maintenance record.

   To return to the Norstar device identification display from the display showing the version number, do one of the following:

   - Press OK to retain the same port number.
   - Press HEADING.
   - Press [Next] to see information about the next port number (or DN if that is how you entered).

   OR

   Press [Back] to see information about the previous port number (or DN if that is how you entered).

Checking the state of the device

Installer password required

From the Norstar device identification display.

1. Press STATE.

   The display shows one of the states listed in the table that follows. If you want, you can disable or enable the device. Refer to *Disabling a device* on page 535 or *Examples of display messages* on page 535.

2. Press OK to return to the device identification display.

How the device state is shown on the display

Display	State of device
Busy DISABLE OK	The device is in use.
Disabling... OK	The device is being disabled.
Enabling... OK	The device is being enabled.
Idle DISABLE OK	The device is not in use.
Unequipped DISABLE OK	There is no device connected to that port.
Disabled by user ENABLE OK	The device has been disabled by someone running a Maintenance session.
Disabled by sys. ENABLE OK	The device has been disabled by the system because it is faulty or because a test is running.
Not available DISABLE OK	There is no state available.

Disabling a device

Installer password required

Give notice that you are disabling equipment.

Inform your users well in advance that you are going to disable their devices.

To disable immediately when the display indicates the device is busy:

1. Press DISABLE. Disable at once? displays.
2. Press YES.

   The system prompts the device user and disables the device in one minute (or immediately, if the device is idle). Press NO to leave this display without disabling the device.

Displays

The following table shows examples of the sequence of messages that might appear on a telephone when you disable a device.

Examples of display messages

Please hang up Maintenance test	Occurs on a busy telephone before disabling
48 seconds until disconnect	
Please hang up	
In Maintenance	Occurs after disabling

Enabling the device

Installer password required

When the display shows you that the device is disabled:

Press ENABLE. Enabling... briefly displays.

The device is immediately enabled and the display shows Idle.

Tips - *The display may briefly show* Enabling..., *then either* Disabled by sys. *or* Disabled by user. *In this case, the system is waiting to enable the module. This may occur after someone has run a Maintenance session and used* Module status. *You cannot enable the device until its module has been enabled.*

Individual lines cannot be disabled in Port/DN status. *To disable a Trunk Cartridge, see Module status on page 537.*

Returning to the beginning

Installer password required

From the display showing the state of the device:

1. Press OK.
2. Press [Heading] until the you reach Port/DN status.

Module status

Module status allows you to:

- look at the inventory of Station Modules, Trunk Modules, Data modules, and modules inside the Integrated Communication System (ICS)
- check the number of Trunk Cartridges in a module
- check the state of the module or its cartridges
- disable or enable the module or its cartridges
- isolate any malfunctioning modules
- disable a module before replacing it
- clear a hung line by disabling and enabling the affected Trunk Cartridge

Tips - *Modules 1 and 2 are located inside the ICS.*
Module 1 connects telephones.
Module 2 connects Trunk Cartridges.

Looking at the module inventory **Installer password required**

Start with the display showing `Port/DN status`.

1. Press [Next]. The display shows `Module status`.
2. Press [Show]. The display shows `Show module:`.
3. Enter the module number.

Tips - *Norstar devices may occupy both the B1 and B2 channels. This may increase the number of devices indicated on the module inventory display. The display is different for Analog Station Modules (ASM) where it will show either* `8 sets on ASM` *or* `16 sets on ASM`.

Checking the number of Cartridges

Installer password required

Start from the module inventory display, which shows the number of Trunk Cartridges connected to the module you chose, for example, `Mod 04: 3 cards`.

1. Press CARD.

   If there is a Trunk Cartridge in a slot, the display shows that four lines are connected, for example, `Card 1: 4 lines`.

2. Press Next or Back to check for Trunk Cartridges in the other slots.

3. Press MODULE to return to the module inventory display.

Checking the state of a module

Installer password required

Start from the module inventory display, which shows the number of Trunk Cartridges connected to the module you chose, for example, `Mod 04: 3 cards`.

1. Press STATE.

   The state of the module is shown on the display.

2. Press OK to return to the module inventory display.

Checking the state of a cartridge

Installer password required

Start from the display that shows the number of lines connected to the Trunk Cartridge you chose, for example, `Card 1: 4 lines`.

1. Press STATE.

   The display shows the state of the cartridge. Some examples of this display are shown in the previous table.

2. Press Next or Back to check the Trunk Cartridges connected to the other Trunk Modules.

3. If required, you can disable or enable the cartridge. Refer to *Disabling a module or its cartridges* on page 539 or *Enabling a module or its cartridge* on page 540.

4. Press OK to return to the display showing how many lines are connected to the Trunk Cartridge.

Disabling a module or its cartridges

Installer password required

Use Page feature prior to disabling.

Use the Page feature to inform people that you are about to disable a module. Mention that they may experience delays in the performance of their devices.

From the display showing the state of the module or cartridge:

1. Press DISABLE. `Disable at once?` displays.

2. Press YES.

   The system disables the module or cartridge in one minute. If the status is idle, the system disables the module or cartridge immediately.

Press NO to leave this display without disabling the module or cartridge.

Enabling a module or its cartridge Installer password required

From the display showing the state of the module or cartridge:

1. Press ENABLE.

   The display briefly shows Enabling....
   The module or cartridge is immediately enabled.
   The display then shows the state of the module or cartridge.

Returning to the beginning Installer password required

From any display showing the state of the module or cartridge:

1. Press OK.
2. Press Heading until the display shows Module status.

System test log

The System test log shows you a list of diagnostic test results, audits, event messages, and alarm codes. By using this feature you can:

- check the items in the log
- check the current alarm (if there is one)
- check when each item in the log occurred
- check the number of consecutive occurrences of an event or an alarm
- erase the log

The System test log holds a maximum of 20 items. You should check and record these items at regular intervals. Erase the log after dealing with all the items.

Checking the items in the log

Installer password required

Start with the display showing `Module status`:

1. Press [Next]. The display shows `Sys test log`.
2. Press [Show]. The display shows `Items in log:`. (If there is no log entry, the display shows `Items in log:0` and returns to `Sys test log`.)
3. Press [Next] or [Back]. The display shows a log item.
4. Write down the item on the System test log record.
5. If the log item is an event message or an alarm code, refer to *Alarm codes* on page 548 or *Event messages* on page 555.
6. Repeat steps 3, 4, and 5 until you have recorded all the items.

Checking the current alarm

If you want to quickly check the highest severity alarm before viewing all the log items, start with the display showing `Items in log:`.

1. Press ALARM.

   The display shows an alarm code if there is a current alarm. If there is no current alarm, ALARM does not appear on the display.

2. Press OK to return to `Items in log:`.

   All alarms are recorded as items in the System test log.

Checking when each item occurred

Start with any display showing a log item:

1. Press TIME. The display briefly shows the date and time.
2. Write the date and time on the System test log record.

Checking consecutive repetitions of an event or alarm

If REPEAT appears under a display showing a log item:

1. Press REPEAT.

   The display shows the number of consecutive times the event or alarm occurred.

Erasing the log

Start with the display showing `Items in log:`.

1. Press ERASE. `Erase log`? displays.
2. Press YES.

   If no new items have been added since the list was entered, the log is erased and the display shows `Log erased`.

   If new items have been added since the list was entered, the display briefly reads `Cancld-new items` and returns to the display `Items in log:`.

3. Press [Heading] to return to `Sys test log`.

System administration log

The System administration log keeps a record of administrative events, such as sessions in which a change was made, invalid password attempts, and password changes.

You can use this feature to:

- check the items in the log
- erase the log
- check when each item in the log occurred

The System administration log holds a maximum of 10 items. Erase the log after dealing with all the items.

Checking the items in the log

Start with the display showing `Sys test log`:

1. Press [Next]. The display shows `Sys admin log`.
2. Press [Show]. The display reads `Items in log:`. (If there is no log entry, the display reads `Items in log:0`.)
3. Press [Next] or [Back]. The display shows a log item.
4. Write down the item on the System administration log record.
5. Repeat steps 3 and 4 until you have recorded all the items.

Checking the current alarm

Start with the display showing `Items in log:`.

1. Press ALARM. The display shows an alarm code.

   If there is no current alarm, ALARM does not appear on the display.

2. Press OK to return to the display showing `Items in log:`.

Checking when each item in the log occurred

Start with any display showing a log item:

1. Press TIME. The display shows the date and time.
2. Write the date and time on the System administration log record.

Erasing the log

Start with the display showing `Items in log:`.

1. Press ERASE. The display shows `Erase log?`.
2. Press YES.

   If no new items have been added since the list was entered, the display shows `Log erased`.

   If new items have been added since the list was entered, the display briefly reads `Cancld-new items` and returns to the display `Items in log:`.

3. If the display shows `Log has changed`, press SHOW to show the new log, or press EXIT to return to `Sys admin log`.

Network evt log

The Network evt log keeps a record of events and alarms that are specific to the T1 network interface.

You can:

- check the items in the log
- erase the log
- check when each item in the log occurred

The Network evt log holds a maximum of 20 items. Erase the log after dealing with all the items.

Checking the items in the log

Installer password required

Start with `Sys admin log` on the display:

1. Press [Next]. `Network evt log` displays.
2. Press [Show]. `Items in log:` displays.

   If there is no log entry, the display reads `Items in log:0`.
3. Press [Next] or [Back]. The display shows a log item.
4. Write down the item on the Network event log record.
5. Repeat steps 3 and 4 until you have recorded all the items.

Checking the current alarm

Start with the `Items in log:` on the display.

1. Press ALARM.

   The display shows an alarm code if there is a current alarm.
2. Press OK to return to `Items in log:`.

Erasing the log

Start with `Items in log:` on the display.

1. Press ERASE.

   The display shows `Erase log?`.

2. Press YES.

   If no new items have been added since the list was entered, the display shows `Log erased`.

   If new items have been added since the list was entered, the display briefly reads `Cancld-new items` and returns to the display `Items in log:`.

3. Press [Heading] to return to `Network evt log`.

Checking when each item in the log occurred

Start with any display showing a log item:

1. Press TIME.

   The display shows the date and time.

2. Write down the date and time on the Network event log record.

Alarm codes

The Norstar ICS system generates alarm codes after system disconnections or after certain anomalies in system operation. All alarm codes appear at the Alarm telephone and in the System test log of a Maintenance session.

For a more complete description of alarm and event codes, consult your technical support representative. The following figure shows an alarm code appearing on a Norstar Alarm telephone display.

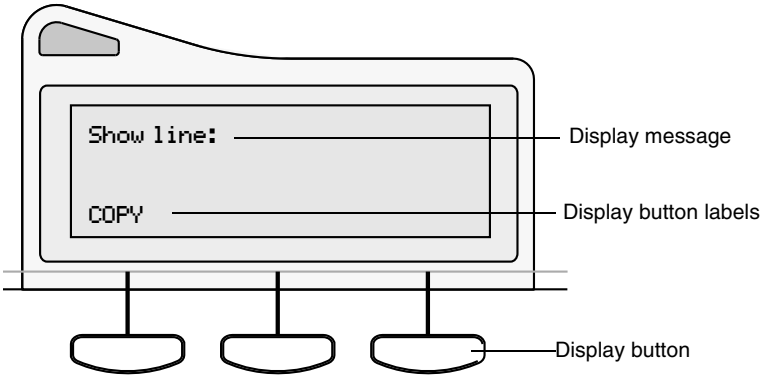

Tips - *The Alarm telephone is assigned in* `Featr settings` *of system programming.*

Alarms have a higher severity than events. Attend to alarm codes before event messages.

If you see an alarm code

1. Write the alarm code on the Sys test log record.
2. Determine the cause of the alarm from the following table.
3. Follow *Alarm troubleshooting* on page 551.
4. Press TIME to see when the alarm occurred.
5. Press CLEAR to clear the alarm.

An alarm code may not be displayed until two minutes after it has been triggered. If the ICS is powered off when the alarm is triggered, the alarm code is not displayed until two minutes after the ICS is powered on.

For a complete list of Norstar alarms, refer to the *Norstar Alarm & Event Code Manual*.

Displays

Example display	Meaning	Possible causes
Alarm: 37 ABBC DD	An error has occurred in the download of a protocol to a BRI Card. A: the maintenance index of the BRI BB: a code describing the nature of the error C: the current download state DD (appears when the error is limited to one protocol): the two-character product identifier of the protocol	The BRI Card is not properly installed.

Example display	Meaning	Possible causes
Alarm: 51 X	Trunk Module disconnected.	All Trunk Cartridges are disconnected from the TM on DS-30 port X. The TM was powered down. The fiber cable from the TM to the ICS is disconnected.
Alarm: 52 X Y	TC disconnected from TM	Trunk Cartridge Y on DS-30 port X is disconnected from the TM.
Alarm: 61 X Y	Incompatible Trunk Cartridge	Trunk Cartridge Y on DS-30 port X cannot operate with the Trunk type assigned to it in Configuration.
Alarm: 62 X Y	Unsupported Auto-answer setting (Loop Start TCs)	Trunk Cartridge X on DS-30 port Y does not support the auto-answer setting.
Alarm: 63 Z	No available DTMF receivers	DTMF receivers are busy, not working properly, or have not been installed.
Alarm: 68-Z	A device has been connected to a port which is not available for the device type.	Power down the system and disconnect the device from the port identified. Reconnect it to a valid port.
Alarm: 76 X	Data Module disconnected.	The Data Module is disconnected from the DM on DS-30 port X. The DM was powered down. The fiber cable from the DM to the ICS is disconnected.

X = DS-30 port numbers, Y = Trunk Cartridge number (numbered from left to right), and Z = Trunk port number

Alarm troubleshooting

Refer to the previous table before following these procedures.

Alarm: 10

1. Check to see if there is a device connected to the ICS (that has a port number beginning with the number 1).
2. If there are no devices connected to the ICS, connect one and then press CLEAR.
3. If there are any devices connected to the ICS, check all the wiring associated with the devices.
4. Refer to *Problems with BRI service* on page 615.

Alarm: 37

1. Check that the BRI Card is properly installed.
2. Remove and re-install the BRI Card.
3. If the alarm persists, replace the BRI Card with another BRI Card of the same type.

Alarm: 40 to Alarm: 47

1. Check the System Network evt log for events in the range 315-336 to verify the frequency of the alarms.
2. Refer to *Digital Trunk Interface trouble* on page 612.

Alarm: 50-X

1. Check that there is a device connected to the Station Module, which has a port number beginning with a number from three to eight.
2. If there are no devices connected to the Station Module, connect one and then press CLEAR.
3. If there are any devices connected to the Station Module, check all the wiring associated with the devices.
4. Refer to *Data Module down* on page 620.

Alarm: 51-X

1. Check the wiring from the ICS to the TM.
2. Refer to *Problems with trunk cartridges service* on page 611.

Alarm: 52-X-Y

1. Follow the procedure in *Problems with trunk cartridges service* on page 611.
2. If the problem persists, replace Trunk Cartridge Y on DS-30 port X.
   Refer to the previous table for the definition of X and Y.

Alarm: 61-X-Y

1. Check that the proper Trunk Cartridges are inserted in the proper slots of the ICS or Trunk Module.
2. Enter programming and look under the Trk/Line data heading. Check that the Trunk Cartridge type is correctly configured.

Check that the Trunk mode and Answer mode settings do not conflict for every line connected to Trunk Cartridge Y. If Trunk mode is set to unsupervised, Answer mode must be set to manual.

OR

Install a Trunk Cartridge in slot Y that matches the type of trunk you have configured.

Alarm: 62-X-Y

1. Check that the proper Trunk Cartridges are inserted in the proper slots of the Trunk Module.
2. Enter programming and look under the `Trk/Line data` heading.
   Check that the Trunk mode and Answer mode settings do not conflict for every line connected to Trunk Cartridge Y. If Trunk mode is set to unsupervised, Answer mode must be set to manual.

Alarm: 63-Z

1. Check that you have the required E&M Trunk Cartridges. There should be a maximum of one for every two auto-answer loop start lines installed in a Trunk Module.
2. Enter programming and look under the `Trk/Line data` heading. Check that the Answer mode is correct for all the loop start lines.
3. Make sure that all of your E&M trunks installed in a Trunk Module are configured as E&M or DTMF, whichever applies, so that the system knows the receivers are there.

4. If the problem persists, an E&M Trunk Cartridge may be malfunctioning. Replace one E&M Trunk Cartridge at a time until the problem is resolved.

Alarm 68-Z

1. Locate the device(s) connected to port(s) not available for that device type.
2. Power down the system.
3. Disconnect the device from the port identified.
4. Reconnect it to a valid port.

Alarm 75

1. Check the connection to your ISDN service provider.

Alarm: 76-X

1. Check the wiring from the ICS to the DM.
2. Refer to *Problems with trunk cartridges service* on page 611.
3. Refer to *Data Module down* on page 620.

Event messages

Event messages appear as items in the System administration log or the System test log of the Maintenance session. Most of these event messages can only be caused by an unusual combination of events, and should rarely occur.

Each event is assigned a severity number. An S preceding this number, S4 for example, may appear in the event message. S9 is the most severe. If the log is full, new event messages with a higher severity number replace existing event messages of a lower severity. For this reason, you should check event messages at regular intervals. You can then deal with all messages before they are replaced.

Dealing with event messages

For every event message that you see:

1. Record the event on the appropriate Maintenance record.
2. Refer to *Significant event messages*.
3. To see if the event caused the Norstar system to automatically restart, consult the table on *Event Message* on page 561.

Significant event messages

The following table lists event messages that are relevant to Maintenance activities. The time that the message is recorded is also provided.

Displays

Event message		The event message is recorded when…
Evt:210-YYYZ	S4	Loopback test YYY on Trunk Cartridge Z has started
Evt:211-YYYZ	S4	Loopback test YYY on Trunk Cartridge Z has stopped
Evt:220-3546	S4	the Sys admin log has been cleared by the DN (3546 in this case)
Evt:221-3546	S4	the Sys test log has been cleared by the DN (3546 in this case)
Evt:222-3546	S5	the DN (3546 in this case) enters the debugging facility that is password protected
Evt:255	S9	administered mode is not supported by the cartridge plugged into the slot
Evt:260-0302	S8	the ICS takes the access line on port 0302 out of service because no current was detected
Evt:261-0302	S1	the access line on port 0302 is returned to service after current was detected (see Evt:260)
Evt:263-302	S8	the ICS takes the E&M line on port 302 out of service because the far end did not respond to a disconnect signal
Evt:264-302	S1	the E&M line on port 302 is returned to service after the far end finally responded to a disconnect signal (see Evt:263)
Evt:265-302	S7	the E&M line on port 302 did not receive an expected wink signal or delay dial signal from the far end
Evt:267	S9	a data module has been disconnected
Evt:268-07	S8	Dialing filter 07 has lost data due to a fault in the system memory

Event message		The event message is recorded when…
Evt:269-3546	S8	the Line/set filter for the DN (3546 in this case) has lost data due to a fault in the system memory
Evt:299	S1	the system powers up after a power failure
Evt:327	S5	short term alarm threshold has been surpassed in the DTI cartridge
Evt:328	S5	short term alarm threshold has been surpassed in the DTI cartridge
Evt:329	S5	short term alarm threshold has been surpassed in the DTI cartridge
Evt:330	S5	short term alarm threshold has been surpassed in the DTI cartridge
Evt:336	S5	long term alarm has been surpassed in the DTI cartridge
Evt:373	S5	the ICS restart diagnostic tool has been activated
Evt:400	S9	Startup programming is performed using [e] [*] [*] [S] [T] [A] [R] [T] [U] [P]
Evt:407	S2	there are no more codes for Speed Dial numbers
Evt:408	S2	there is no more memory for Speed Dial codes
Evt:412-3546	S5	the Installer password has been changed by the DN (3546 in this case)
Evt:413-3546	S3	the System Coordinator password has been changed by the DN (3546 in this case)
Evt:414-3546	S5	an invalid Installer password has been entered by the DN (3546 in this case)
Evt:415-3546	S3	an invalid customer password has been entered by the DN (3546 in this case)
Evt:416-3546	S4	programming is performed using [e] [*] [*] [C] [O] [N] [F] [I] [G]
Evt:417-3546	S2	programming is performed using [e] [*] [*] [A] [D] [M] [I] [N]
Evt:418	S7	a DN change is successful
Evt:419	S2	the time setting has been changed
Evt:421	S8	a DN change failed

Event message		The event message is recorded when…
Evt:422-3546	S6	a length change by the DN (3546 in this case) has been requested
Evt:423-3546	S6	an individual DN change has been requested by the DN (3546 in this case)
Evt:441	S2	a timeout occurred while waiting for ANI or DNIS digits to be received
Evt:442	S5	a timeout occurred while waiting for ANI or DNIS digits to be received
Evt:453	S4	Someone entering **CONFIG
Evt:454	S5	Invalid password entered
Evt:458	S4	Call-by-Call NVRAM data is corrupt
Evt:459	S9	DN length has been changed to less than 3 digits
Evt:680	S9	wireless system is disabled
Evt:681	S9	activation or recovery code entered
Evt:683	S9	new base station configuration detected
Evt:687	S4	the data driver has received a bad call reference
Evt:688	S4	the data driver has received a bad data event
Evt:689	S4	the data driver could not allocate a new index
Evt:690	S4	no response to the ICS within 10 seconds of being sent an initialization message
Evt:691	S4	no response to the ICS within 3 seconds
Evt:692	S4	a bad parameter value has been received in a stimulus message from the data device
Evt:693	S3	old data to be discarded has been detected
Evt:694	S4	RADAR flow control has received a bad stimulus message from an off-core application
Evt:695	S4	attached set denied request for a B-channel
Evt:696	S2	corrupt CLID length
Evt:697	S2	an asynchronous data report generated by SDI module

Event message		The event message is recorded when…
Evt:698	S8	incorrect software key entered
EVT799-00040B	S7	a call processing error on the fourth BRI loop; see *Event message 799* on page 559.
Evt:822	S8	Alarm code 63 is sent because there are no DTMF receivers for an incoming call
Evt:882	S9	mobility data re-evaluation sequence initiated
Evt:883	S4	an invalid dial pulse signal was received by the DTI
Evt:992	S6	auto attendant error

Event message 799

Event message 799 indicates a call processing error has occurred on an ISDN line. The event number is followed by a number representing the line or loop number, and a code for the type of error.

EVT799-XXXX YYS7	In this example, the error has occurred on line XXX and the error code is YY.

Error code	Meaning
01	Internal software error. Cannot acquire the B-channel from the B-channel arbitrator.
02	Internal software error. There is no free line available for the call.
03	A call that is not on the B-channel has been attempted. These kind of calls are part of EKTS service, which is not supported by this version of the software. Check with your service provider to make sure your package does not include EKTS service.
04	Internal software error. Failed to instantiate on the chain.
05	Internal software error. Activation procedure failed.

Error code	Meaning
06	Internal software error. Index conversion failed.
07	Unexpected digits on a Manual answer mode line. Configuration of the ICS and the network connection may not match.
08	Internal software error. Cannot seize central office (CO) line on a BRI connection.
09	Cannot get vterm (virtual terminal) from the Vterm Server.
0A	Central office did not respond to the SPID initialization request.
0B	Central office has rejected the SPID. Verify your SPID information programmed under Hardware and with your ISDN service provider.
0C	Internal software error. Already instantiated on the chain.

Displays

You should rarely see any event messages that are not described in the *Significant event messages* on page 556. If you do see one of these event messages, the Norstar system has followed its normal recovery from an unusual combination of system events. Although the problem is not a serious one, repeated occurrences of the event number should be reported as soon as possible.

As a result of some events, the Norstar system automatically restarts itself. The table on the next two pages lists all the event numbers and tells you which of these events are associated with Norstar system restarts.

Most of these events are recorded in the Sys test log. The few exceptions to this are recorded in the Sys admin log, as indicated.

Event Message	System Restart	Event Message	System Restart
101-106	Yes	400 (Admin log)	Yes
107	No	401-403	No
108-112	Yes	405-411	No
113	No	412-419 (Admin log)	No
114-116	Yes	421-423 (Admin log)	No
117	No	424-425	No
118-120	Yes	426-430	Yes
121-123	No	431	No
124-125	Yes	432	Yes
126-129	No	433	No
130	Yes	441-442	No
131-132	No	453	No
133-134	Yes	454	No
135-136	No	458-459	No
137	Yes	600-602	Yes
138-150	No	603-613	No
151	Yes	614	Yes
152	No	615-629	No
160-164	No	630	Yes
170-173	No	631-646	No
200-211	No	680	No
220 (Admin log)	No	681	No
221-222	No	683	No
223 (Admin log)	No	689-698	No

Event Message	System Restart	Event Message	System Restart
224	Yes	799	No
225–228	No	800–802	No
229 (Admin log)	No	803	Yes
230–235	No	804–807	No
245–248	Yes	808	Yes
250–256	No	809	No
260–271	Yes	810	Yes
280–283	No	811–820	No
285–298	Yes	823	Yes
299	No	824–825	No
327	No	851	No
328	No	882	No
329	No	883	No
330	No	900	No
336	No	940–943	No
373	No	950–989	No

Provisioning BRI and PRI lines

This section discusses how you put BRI and PRI lines into and out of service.

BRI and T1 lines

Installer password required

Provisioning applies to BRI and T1 loops and lines. It allows you to place loops and lines in or out of service, either before or after the BRI Cards have been installed in the ICS.

When you provision a loop, ISDN terminals on the loop can be used to make outgoing calls or receive incoming calls (S or U-LT loop).

Loop lines are also available for use by the devices attached to the system (T, S, or U-NT loop). When you are configuring a T, S, or NT loop, you must also provision each line on the loop to place the lines in service.

Cd1-ICS

The card type will appear with the setting. If no card has been installed, you can change the card type under Hardware.

1. Press [Show] to display the loops found on the card.
2. Press REMOVE to take the loop out of service.
3. If lines on the loop are busy, the display will ask if you still want to remove the loop from service.
   Press YES to go ahead.

L001

If the loop is configured as a U-NT, T or S loop, press [Show] and [Next] to display the individual lines. There are no lines associated with an S or U-LT loop.

1. Press REMOVE to take the line out of service.
2. If line is busy, the display will ask if you still want to remove it from service. Press YES to go ahead.

Provisioning a T1 line

Start with the display showing Network evt log.

1. Press [Next]. Provisioning displays.
2. Select a module and card type, see *Show module* on page 495.
3. Press [Show]. Show module: displays.
4. Enter the number of the line to be provisioned. The display shows the line and its current status.
5. Press PORT to identify the logical port number for the line. Lines cannot be provisioned from the PORT display. Press LINE to return to the line number display.
6. Press [Next] to view settings for the next line number.
7. Press [Heading] until you return to Provisioning.

Provisioning a PRI line

Installer password required

ISDN lines are provisioned by default. For information on adding a DTI card (configured as PRI) see *Cards on KSU* on page 495.

Deprovisioning a line

Installer password required

Deprovisioning all of the lines on a DTI does not disable the cartridge.

Disabling a PRI Channel

Installer password required

PRI channels can be disabled. However, there is no association between a line number and a b-channel. Disabling a b-channel can be done when you have fractional PRI. See *Working with fractional PRI* on page 581.

Tests

Norstar allows you to run tests which verify the integrity of the installation wiring for the telephones.

In addition, you can evaluate the transmission quality of a BRI loop through your service provider using a loopback test to evaluate different aspects and segments of the T1 digital transmission path. You can only run one loopback test at a time on any one DTI.

Choose an appropriate time to run tests.

Do not run the loopback tests while ports are being disabled or during the first two minutes after Startup programming. If you do, the tests may stop running with ports still disabled. To recover from this, unplug the ICS from the power outlet, then plug it in again.

The loopback tests disrupt service. Do not run tests during busy user times.

Loopback tests for T1 or ISDN-PRI lines

Installer password required

The following messages may appear on the Alarm Telephone during Loopback tests.

Message	Explanation
EVT: 210-YYYZ	Loopback test YYY on Trunk Cartridge Z has started
EVT: 211-YYYZ	Loopback test YYY on Trunk Cartridge Z has ended

Line loopback

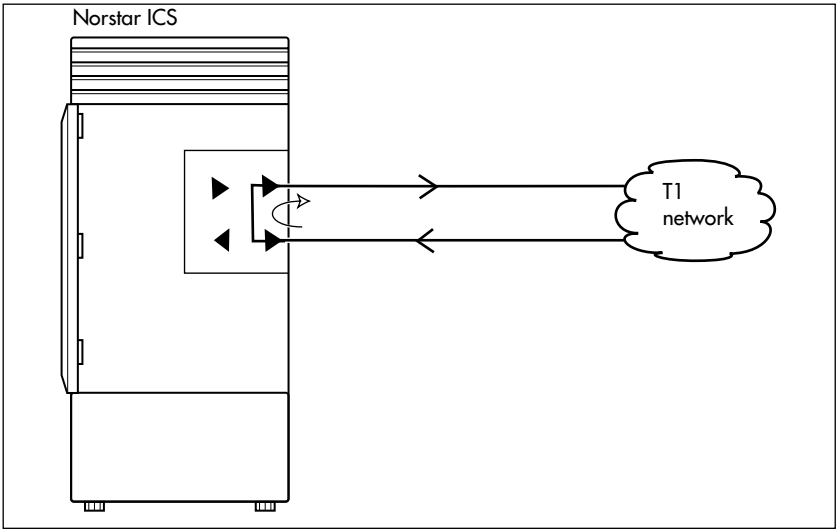

The line loopback test loops the full 1.544 Mbps signal received from the network back to the network. The looped signal is regenerated without any change in the framing format and without the removal of any bipolar violations. The line loopback test can also be invoked and stopped remotely using the in-band signal or via the facility data link (FDL) in extended super frame (ESF) format.

The line loopback test must be run in coordination with the T1 or PRI service provider. Some test patterns can cause the DTI to reset. To avoid this, start the line loopback test from your system before the T1 or PRI service provider begins their test, and stop the line loopback test from your system after the T1 or PRI service provider ends their test.

Payload loopback

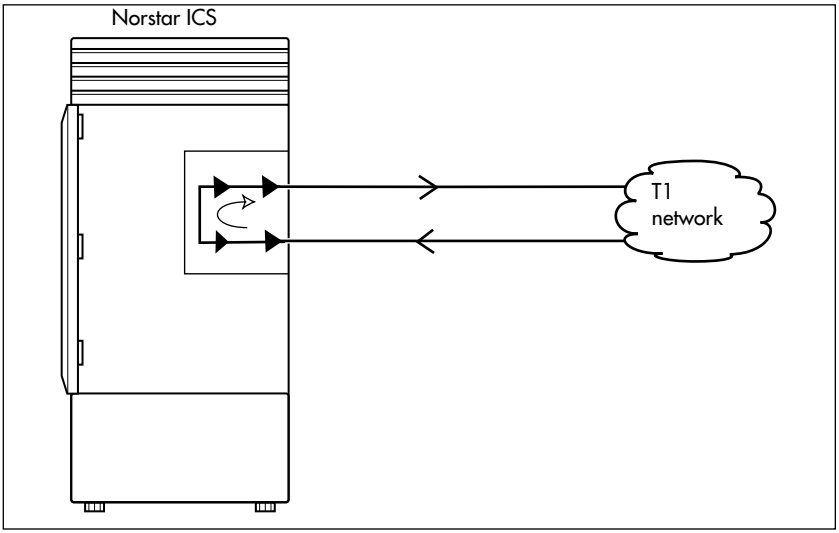

The payload loopback test loops the received information bits (192 per frame) back to the network. The payload loopback test can also be invoked and stopped remotely via the facility data link (FDL) in extended super frame (ESF) format.

The payload loopback test must be run in coordination with the T1 service provider. Some test patterns can cause the DTI to reset. To avoid this, start the payload loopback test from your system before the T1 service provider begins their test, and stop the payload loopback test from your system after the T1 service provider ends their test.

Card edge loopback

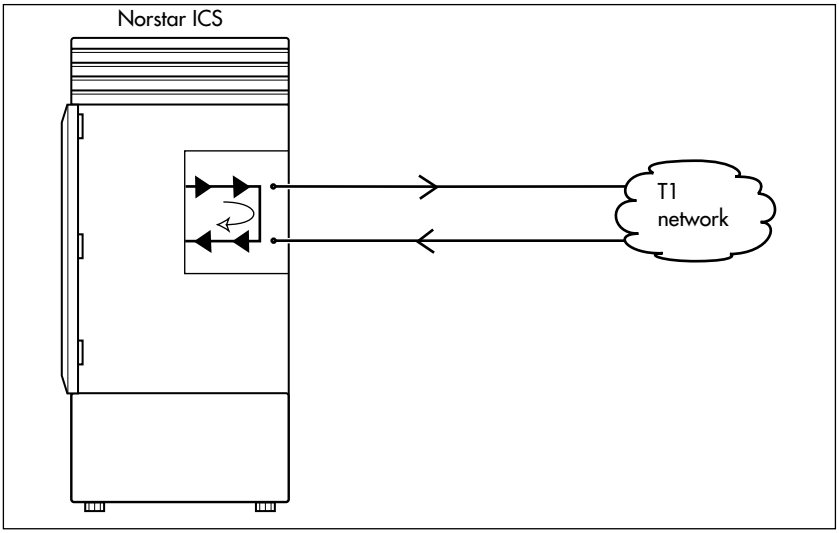

The card edge loopback test loops the outgoing signal on the DTI back to its internal received signal path. Signal paths to the external network are disconnected.

Continuity loopback

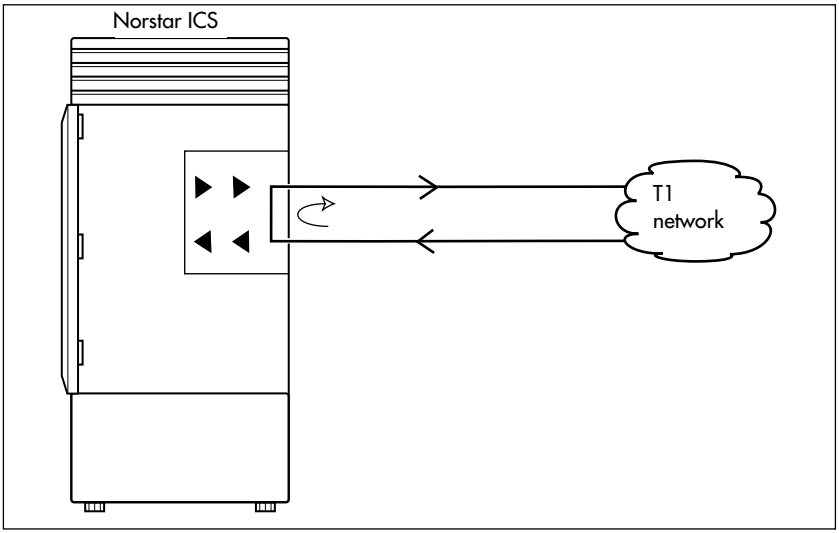

The continuity loopback test shorts the tip and ring pair of the receive signal path with the transmit signal path. This test allows you to check the metallic continuity of the external wiring.

Tests initiated from Norstar

You can start and stop Loopback tests in Maintenance programming under the heading Loopback tests. You can also push a button on the DTI faceplate to start and stop the continuity test.

You can run DTE and DS30 Loopback tests to verify the SDI data transfer capabilities. Under the Hardware heading, ensure that the Type setting for data module is SDI before choosing the Loopback test you will run.

Tests initiated by the central office

If the internal CSU is administered on line loopback and payload loopback tests can also be invoked and stopped by the central office. In order to be able to run a payload loopback test, the DTI must be configured for extended superframe format.

Starting a loopback tests

Installer password required

Give notice that you are running a loopback test.

Calls on all T1 or PRI lines on the DTI will be automatically dropped when a loopback test is invoked. Use the Page feature to notify people using the system that a test is about to begin and that calls will be disconnected.

Start with the display showing `Loopback tests:`.

1. Press [Show]. `Show Module:` displays.
2. Press [Next]. `Cards on KSU` displays.

   If you want to test cartridges on another module, press [Next] until the display shows the module.

3. Press [Show]. `Cd1-KSU` displays.

   If you want to test the second cartridge on the KSU, press [Next]. The display shows `Cd2-KSU`.

4. Press [Show].

   If there is an analog cartridge in the slot or the slot is empty, the display shows `Need digital crd`.

5. Press [Next] until the display shows the test you want to run: `Continuity loopback`, `Line loopback`, `Payload loopback`, `Card edge loopback`.
6. Press START to begin the test. The display shows the test name followed by `running`.
7. Press STOP to end the test.

Operating a Continuity loopback test

Installer password required

You start the Continuity loopback test by pressing the button on the front of the DTI. Calls on all lines on the cartridge are automatically dropped when a loopback test is invoked.

Give notice that you are running a loopback test.

Calls on all T1 or PRI lines on the DTI will be automatically dropped when a loopback test is invoked. Use the Page feature to notify people using the system that a test is about to begin and that calls will be disconnected.

- The red LED above the button remains on until the test is canceled.
- Invoking a continuity loopback test automatically cancels any other test in progress.
- To stop the continuity loopback test, press the button on the DTI. The red LED above the button turns off when the test is canceled.

Loopback test for BRI lines

Installer password required

The loopback test for BRI lines loops the incoming BRI payload back to the local exchange (service provider) for evaluation of the transmission quality. Loopback tests should be conducted only under the guidance of the service provider, and the results from these tests are returned to the service provider.

You can run loopback payload tests simultaneously on multiple loops or multiple cards. The loop must be provisioned to perform the test. All calls on the card you are testing will be dropped at the start of a loop payload test.

Operating a payload loopback test Installer password required

All calls on a BRI loop are dropped when you start loopback test.

While the loopback test is in progress, the BRI lines go out of service. There is no warning from the system. Pick an appropriate time to do a test and warn users that they will lose any calls in progress.

Start with the display showing `Loopback tests:`.

1. Press [Show]. `Show Module:` displays.
2. Enter a module number or press LIST to scroll through modules. `Cards on KSU` or `Card on Mod X` displays.
3. If you want to test cartridges on another module, press [Next] until the display shows the module.
4. Press [Show]. `Cd1-KSU` or `Cd1-ModX` displays.

   If you want to test the second cartridge on the KSU, press [Next] to display `Cd2-KSU` or `Cd1-ModX`.
5. Press [Show].
   - If there is an analog cartridge in the slot or the slot is empty, the display shows `Need digital crd`.
   - If there is a BRI cartridge with U-NT or S/T loops, the display shows `Loop nnn`.
6. Press [Show]. `Payload loopback` displays.
7. Press START to begin the test. `Payload running` displays.
8. Press STOP to end the test.

Note: You can exit programming or move on to other programming or loop testing while the test is running.

CSU stats

Each DTI is equipped with an internal channel service unit (CSU). When enabled, the internal CSU monitors the quality of the received T1 signal and provides performance statistics and diagnostic information.

DTIs must be individually programmed to establish parameters for collecting and measuring transmission performance statistics by the CSU.

Statistics

Installer password required

The CSU provides both performance and alarm statistics. Three performance parameters are accumulated:

- errored seconds (ES-P)
- severely errored seconds (SES-P)
- unavailable seconds (UAS-P)

These parameters are defined as per TIA-547A. Errored seconds are enhanced to include control slip (CS) events.

The parameters are stored for the previous 15-minute interval, the 15-minute intervals in the last 24 hours, and the previous 24-hour interval. Only near-end performance data is recorded.

The internal CSU continuously monitors the received signal and detects four types of transmission defects:

- any active carrier failure alarms (CFA) — loss of signal LOS, out of frame OOF, alarm indication signal AIS, remote alarm indication RAI
- the number of bipolar violations that occurred in the last minute

- any defects that occurred in the last minute — loss of signal LOS, out of frame OOF, alarm indication signal AIS
- the number of milliseconds of short term alarms in the last minute — loss of signal LOS, out of frame OOF, alarm indication signal AIS, remote alarm indication RAI.
  A shortterm alarm is declared when the detected defects persist for tens of milliseconds.

A carrier failure alarm (CFA) is a duration of carrier system outage. CFA types reported can be mapped to CFAs defined in TIA-547A and TR62411 as follows:

Norstar	TIA-547A	TR62411
LOS CFA	Red CFA	Red CFA
OOF CFA	Red CFA	Red CFA
AIS CFA	Red CFA	AIS CFA
RAI CFA	Yellow CFA	Yellow CFA

The criteria for declaring and clearing the alarms is selectable to meet those in TIA-547A or TR64211.

Checking the performance statistics

To check the performance statistics, start with the display showing `CSU stats`:

1. Press [Show]. `Show card:` displays.

   If the ICS in not equipped with DTIs, or if both cartridges have their internal CSU setting programmed to off, the display shows `Unequipped`.

2. Press [1] or [2] depending on which Trunk Cartridge you are checking. `Cd1-KSU or Cd2-KSU:` displays.
3. Press [Show] to see the results.

4. Press TIMER. The display shows the date and time that the system began collecting statistics.
5. Press Next. Performnce stats displays.
6. Press Show to view the performance stats. Current interval displays.
7. Press Show to display the duration of the current interval.

   OR

   Press Next until the display shows the type of interval statistics you want to check. Options are:

   - 15 min intervals for intervals in the last 24 hours, numbered from the most recent (01) to the oldest (96). Press Show, then enter an interval number, or press Next to view the most recent interval. The display shows the start time of the interval.
   - 24 hour summary for a summary of the previous 24 hours. Press Show to display the number of intervals in the summary.
8. Press Next. ES: displays the number of errored seconds.
9. Press Next. SES: displays the number of severely errored seconds.
10. Press Next. UAS: displays the number of unavailable time seconds.
11. Press Heading until the display shows Performnce stats.

Checking the CSU alarms

Installer password required

To check the CSU alarms, start with Performnce stats.

1. Press [Next]. Alarm stats displays.
2. Press [Show]. Active alarms displays.

Checking active alarms

Start with the display showing Active alarms.

1. Press [Show]. The display shows the first active alarm or no active alarms.
2. Press [Next] or [Back] to cycle through the complete list of active alarms.
3. Press [Heading] to return to Active alarms.

Checking carrier failure alarms

Start with the display showing Active alarms.

1. Press [Next]. CFA alarms displays.
2. Press [Show].

   The display shows one of the following:
   LOS CFA history, OOF CFA history, RAI CFA history or AIS CFA history.
3. Press [Next] until the display shows the type of alarms you wish to view.
4. Press [Show]. The display shows the first history item and the time that the alarm started.
5. Use [Next] and [Back] to move through the history items.

Checking bipolar violations

Start with `Active alarms`.

1. Press [Next] until you find `Bipolar violatn`.
2. Press [Show]. The display shows the number of bipolar violations that occurred in the last minute.

Checking short term alarms

Start with `Active alarms`.

1. Press [Next] until you find `ShortTerm alarms`.
2. Press [Show].

   The display shows the first type of shortterm alarm and the number of milliseconds, not necessarily contiguous, it was active in the last minute.

3. Press [Next] and [Back] to move through the short term alarms.

Checking defects

Start with `Active alarms`.

1. Press [Next] until you find `Defects`.
2. Press [Show].

   The display shows the first type of defect and the number of milliseconds, not necessarily contiguous, the hardware reported it active in the last minute.

3. Press [Next] and [Back] to move through the defects.

Resetting all statistics

Start with the display showing `Alarm stats`:

1. Press [Next]. `Stats log` displays.
2. Press [Show]. `Reset stats`? displays.
3. Press YES to erase all the current statistics and begin collecting statistics again.

Diagnostic tools

The command under this heading allows you to perform a warm restart on your system.

1. At the Diagnostic prompt, press [Show].

   Restart system? displays.

2. If you are sure you want to perform a warm start on your system, press YES. Otherwise, press CANCEL.

Link Status

Working with fractional PRI

Installer password required

When you purchase PRI from your service provider, you can request the number of B-channels that are allocated for you to use. For example, you may want to use only 12 B-channels instead of 23 B-channels. If this is your situation, you should disable all the B-channels that you do not need.

It is recommended that the number of lines that are deprovisioned on a DTI card (configured as PRI) be the same as the number of B-channels that are disabled. For example when B-channels 13-23 are disabled, you should deprovision lines 13 to 23.

Start with the display showing `Maintenance`

1. Press [Show]. `System version` displays.
2. Press [Next] until you find `Link status`.
3. Press [Show]. `Cards on KSU` displays.
4. Press [Show]. `Cd1-KSU: PRI` displays.
5. Press [Show]. `B channel` displays.
6. Press [Show]. You can view the status of the PRI channel, for example: `PRI:B01 Idle`.

Note: When the display shows `PRI:B01 Near`, it means that the channel has been disabled by Norstar.
When the display shows `PRI:B01 Far`, it means that the channel has been disabled by the CO.

7. Press `Enable` or `Disable` key to change the setting for the channel or press [Next] to move to the next B-channel.

Usage Metrics

Hunt groups

This feature gives you statistical information about hunt group calls.

From `Usage Metrics`, start with the display showing `Hunt groups`.

1. Press [Show]. `Show group:` displays.
2. Enter the group number. `Hg1 metrics` displays.
3. Press [Show]. The display shows the date the information was last cleared.
4. Press [Next]. `TotalCalls:` displays.

   The displayed value is the total number of calls received by the hunt group, up to a maximum value of 99999.
5. Press [Next]. `Ans:` displays.

   The displayed values are the number of calls that were answered up to a maximum value of 99999 and the percentage of answered calls versus total calls up to a maximum value of 999.
6. Press [Next]. `Avg ans: _sec` displays.

   The displayed value is the average time in seconds that it took to answer a call, up to a maximum value of 999.
7. Press [Next]. `Abndn:` displays.

   The displayed values are the number of calls that were abandoned up to a maximum value of 99999 and the percentage of abandoned calls versus total calls up to a maximum value of 999.

8. Press [Next]. Busy: displays.

   The displayed values show the number of times the hunt group was busy up to a maximum value of 99999 and the percentage of busy call versus total calls up to a maximum value of 999.

9. Press [Next]. Ovrfl: displays.

   The displayed values show the number of calls that were sent to the overflow position up to a maximum value of 99999 and the percentage of overflow calls versus total calls up to a maximum value of 999.

10. Press [Next]. Avg Q:_ sec displays.

    The displayed value is the average time, in seconds, that the call waited in the queue, up to a maximum value of 999.

Call-by-Call

Installer password required

This feature gives you statistical information on call-by-call limit settings for PRI when the protocol is set to call-by-call routing.

From Usage Metrics, start with the display showing CbC limit stats.

1. Press [Show].

   The display shows the first pool (for instance, PRI-A) which supports CbC routing. Press NEXT to show the other pool if it is supported.

2. Press [Show]. Service: displays.

The service that is displayed depends upon the protocol. Press NEXT to select a different service.

3. Press [Show].

   The display shows the supported call type for the selected service.

4. Press [Next] to select the next supported call type, either Incoming calls or Outgoing calls.

   For Incoming calls press [Show].
   The display shows Min denied: _.
   Press [Next]. The display shows Max denied:_

   For Outgoing calls press [Show].
   The display shows Min denied:_. Press [Next].
   The display shows Max denied:_

Note: The value for Min denied and Max denied can be from 0 to 999.

Clearing the metrics

After step 1 in the previous section, press CLR to clear the Min and Max denied metrics values for all call types and all supported services for that pool.

Troubleshooting

These troubleshooting procedures allow you to solve many problems in the Norstar system.

Follow these procedures before replacing any components.

Only qualified persons should service the system.

The installation and service of this unit is to be performed only by service personnel having appropriate training and experience necessary to be aware of hazards to which they are exposed in performing a task and of measures to minimize the danger to themselves or other persons.

Electrical shock hazards from the telecommunication network and AC mains are possible with this equipment. To minimize risk to service personnel and users, the ICS must be connected to an outlet with a third-wire ground. In addition, all unused slots should have filler faceplates installed and the doors should be in place at the completion of any servicing.

Service personnel must be alert to the possibility of high leakage currents becoming available on metal system surfaces during power line fault events near network lines. A risk point on the ICS is the power cord earth ground pin. These leakage currents normally safely flow to Protective Earth ground via the power cord.

Therefore, it is mandatory that connection to an grounded outlet is performed first and removed last when cabling to the unit. Specifically, operations requiring the unit to be powered down must have the network connections (central office lines) removed first.

Where more than one procedure is given, the procedures represent different options from which you can select one.

Troubleshooting procedures for the Digital Mobility phones are included in the Digital Mobility phones documentation.

Getting ready

Before you begin troubleshooting, gather all the information that is relevant to your network configuration:

- the *Modular ICS Programming Record*
- records from people who use the network
- information about other hardware and non-Norstar features within the public or private network

Notify service provider of T1 or PRI signaling disruption.

Notify your T1 or PRI service provider before disconnecting your T1 or PRI lines, removing power to your system, or performing any other action that disrupts your T1 or PRI signaling. Failure to notify your T1 or PRI service provider may result in a loss of T1or PRI service.

Tips - *Remember that you can check many of the system parameters without having to go into a programming session.*

Use Line Profile ([℮] [*] [*] [L] [I] [N] [E] *) from a telephone with a two-line display, to check programming for any line.*

Use Set Profile ([℮] [*] [*] [S] [E] [T] *) from a telephone with a two-line display, to check programming for any telephone.*

Use Button Inquiry ([℮] [*] [0] *) to check the buttons on a particular telephone.*

Types of problems

The problems you encounter will likely occur into one of the following categories:

Misunderstanding a feature

A problem may be reported because a Norstar user is unfamiliar with the operation of a given feature. You may be able to solve the problem simply by demonstrating how to use the feature correctly.

Programming errors

You may encounter problems caused by errors in programming. A feature may have been programmed incorrectly or may not have been programmed at all. Refer to the section on programming the feature to ensure all the parameters have been correctly programmed.

Wiring connections

Wiring problems are caused by loose, unconnected, or incorrect wiring. Use the procedures in the section on Checking the hardware as a guide.

Equipment defects

You may encounter problems caused by Norstar equipment defects. See the appropriate section for problems related to the system hardware.

General troubleshooting procedure

1. Diagnose the trouble by determining:
   - the types of problems users have experienced
   - the frequency of the problems
   - how many telephones are affected
2. Check how a feature is being used.
   A problem may have been reported because of a misunderstanding about how a feature works. Confirm that the person who reported a problem understands the intended use and operation of any feature in question.
3. Check for programming errors.
   Check that the programming recorded in the *Programming Record* is correct for the intended operation of the system, and verify that the programming has been correctly entered.
4. Run a Station set test (✆ 8 0 5).
   Instructions are included in the *Modular ICS 7.0 System Coordinator Guide*.
5. Check the wiring and hardware connections.
6. If the problem persists, run a Maintenance session as described in *Beginning a Maintenance session* on page 528.
7. If hardware is defective, replace it.
8. If the trouble requires expert advice, follow your company procedure for obtaining assistance.

Problems with telephones

Set has faulty buttons, display, handset or other hardware problems

Run a Station Set Test ([ ] [8] [0] [5]).

Detailed instructions are contained in the *Modular ICS 7.0 System Coordinator Guide*.

Unreadable set display

If the trouble is with telephones with two-line displays

1. Press [ ] [*] [7].
2. Press UP or DOWN to adjust the display to the desired level.
3. Press OK.

Tip - *The number of contrast settings varies with the model of telephone.*

If the trouble is with telephones with one-line displays

1. Press [ ] [*] [7].
2. Press a number on the dialpad to adjust the display to the desired level.
3. Press [ ].

If the display is still unreadable

1. Go into `Maintenance` in programming and disable the problem telephone.
2. Replace the problem telephone with a working one.
3. Enable the working telephone.

Telephone dead

1. Run a Station Set Test ([✆] [8] [0] [5]).

   Detailed instructions are contained in the *Modular ICS 7.0 System Coordinator Guide*.

2. If more than one telephone is affected, refer to *Data Module down* on page 620.
3. Check for dial tone.
4. Check the display.
5. If the problem persists, replace the telephone with a working set of the same type. This ensures the programming is downloaded to the new set.
6. Check the internal wiring at both the modular jack and the distribution cross-connect. A TCM port should have between 15 and 26 V DC across the Tip and Ring when the telephone is disconnected.
7. Check the line cord.

Running a Maintenance session to test a dead telephone

1. Run a Maintenance session to ensure that the telephone is not disabled. See *Port/DN status* on page 530.
2. Disable the port to which the telephone is connected, using `Port/DN status`.
3. Enable the port to which the telephone is connected, using `Port/DN status`.

Replacing a telephone

In a powered-up system, an existing telephone can be replaced by a new telephone. A new telephone is one that was not previously in service within the system.

Replacing telephones of the same type

If an existing telephone is unplugged, and a new telephone of the same type is then plugged into the same jack, for example, replacing a 7208 digital phone with another 7208 digital phone, the new telephone acquires the programming and the internal number of the old telephone. This is normally done to replace a defective telephone.

Replacing telephones of different types

If an existing telephone is unplugged, and a new telephone of a different type is plugged into the same jack, the new telephone keeps the old internal number. The new telephone receives a default profile for a telephone of its type. You then need to program the terminal as described in the *Modular ICS 7.0 System Coordinator Guide*.

If the telephone being replaced has more lines than the new telephone, automatic outgoing line selection may not work with the handsfree feature. A line must be selected manually.

Status of a telephone that was replaced

The old telephone that was unplugged and replaced by a new telephone loses its programming and internal number. The internal number of the old telephone has been given to the new telephone. The programming has either been removed or given to the new telephone when it was plugged into the old jack. The replaced telephone, if it is plugged back into the system, is now treated by the system as a telephone not previously in service.

Note - *7316 and 7316E digital phones have different default settings on systems running MICS 6.0 and newer software. Therefore, if you replace one type with the other, all user-programmed settings are lost and the line numbering changes to reflect the default numbering for the new telephone.*

Emergency telephone dead

1. Verify that the power at the ICS or Trunk Module is not on.
2. Verify that the trunk module allows support for emergency telephones. Refer to *Emergency telephone* on page 291.
3. Verify that there is no dial tone at the emergency telephone.
4. Check that the external line and emergency telephone connections have been made correctly.
5. Ensure that the emergency telephone is not faulty by connecting it directly to the external line and listening for dial tone.
6. Verify that the ICS has a Loop Start Trunk Cartridge installed in slot 4. Verify that the Trunk Module has a Loop Start Trunk Cartridge installed in the left-most slot.

7. Verify that there is dial tone on lines 002 (ET1 on CD1) and 026 (ET2 on CD2) of the ICS and on the first line of each Trunk Module.
8. Replace the ICS if the emergency telephone is connected to the ICS or replace the Trunk Module if the emergency telephone is connected to the Trunk Module.

Problems with lines

The troubleshooting problems listed here focus on trouble with making calls or using lines. For problems which are specific to BRI lines, refer to *Problems with BRI service* on page 615.

Calls cannot be made (but can be received)

1. Press [⊘] [*] [0].
2. Press a line button.
3. If an incorrect line number or name appears, or if neither appears, on the display, check the programming settings.

   OR

   If the correct line number or name appears on the display, make sure the external lines are properly cross-connected.

4. Check external lines by attaching a test telephone directly on the distribution block.
5. Ensure that the 25-pair cable is properly connected to the modules or the ICS.
6. Run a Maintenance session.
7. Use `Module status` to verify that the module on which the Trunk Cartridge is installed is not disabled or unequipped.
8. Run a Maintenance session and disable the appropriate ports using `Port/DN status`.
   Charts showing external line port number defaults appear under *Wiring charts* on page 260.
9. Enable the appropriate ports using `Port/DN status`.

10. If you still cannot make external calls, power down, then power up the system. This should be done after business hours to avoid losing calls.
11. To check the line, contact your service provider or central office.

Notify service provider of T1 signaling disruption.

Notify your T1 service provider before disconnecting your T1 lines, removing power to your system, or performing any other action that disrupts your T1 signaling. Failure to notify your T1 service provider may result in a loss of T1 service.

Dial tone absent on external lines

1. Use Button Inquiry ([⊙] [*] [0]) to display the number of the external line you are testing.
2. Check for dial tone using a test telephone at the connections for the external line on the distribution block.
3. Make sure that a Trunk Cartridge for the line is properly installed in the ICS or Trunk Module.
4. Make sure that the Trunk Module fiber cable is properly connected to the Expansion Cartridge on the ICS. Refer to *Problems with trunk cartridges service* on page 611 and *Trunk or Station Module down* on page 619.
5. Run a Maintenance session to ensure that the line is not disabled. See *Port/DN status* on page 530.

Hung lines at a telephone

Line indicators that have been solid for a long time are the only visible indication that lines are hung.

Possible problem

A line that has been redirected using Line Redirection may, under some circumstances, remain busy after a call is over. If this happens, the outgoing line for the redirection also remains busy. You can clear this kind of hung line only at the telephone that was used to redirect the line.

Solution

1. Enter the Button Inquiry feature code ([e] [*] [0]) at the telephone that was used to redirect the line.
2. Press the button of the redirected line.
3. Press SHOW or [#] .
4. Press DROP or [*] .

Both the redirected line and the outgoing line for the redirection should now be cleared.

Possible problem

The supervision and/or Discon timer programming for the line do not match the settings for the line at the central office.

Solution

Verify that your programming for the line matches the central office settings.

Possible problem

Lines are still hung after all the above solutions have been investigated or tried out.

Solution

For lines that are hung for any other reason, you will have to run a Maintenance session.

1. Run a Maintenance session and go to `Module status`.
2. Disable and enable the affected Trunk Cartridge.

Follow the procedures in the *General troubleshooting procedure* on page 590 before proceeding.

Auto-answer line rings at a telephone

This section describes possible problems and solutions if an auto-answer line mistakenly rings at a telephone.

Possible problem

You configured a loop start trunk as auto-answer but the installed hardware does not support disconnect supervision. In this case, the symptom would be accompanied by the Alarm 62 code symptom.

Solution

Reconfigure the trunk as manual-answer.
OR
Replace the Trunk Cartridge with one that provides disconnect supervision.

Possible problem

The line is configured as auto-answer and unsupervised.

Solution

Reconfigure the line as manual-answer.
OR
Reconfigure the line as supervised.

Possible problem

The line is not equipped for disconnect supervision at the central office.

Solution

Reconfigure the trunk as manual-answer.

Possible problem

The Discon timer setting for the Trunk Cartridge in `Trk/Line data` does not match the setting for the line at the central office.

Solution

Reconfigure the Discon timer to match the setting at the central office.

Prime telephone gets misdialed calls

This section describes possible problems if the Prime telephone is receiving calls that should be routed elsewhere.

Possible problem

The digits sent by a switch at a central office or in the private network did not match any Received number, the Auto DN, or the DISA DN. The call has been routed to the prime telephone for the incoming trunk.

Solution

1. Verify that the switch is sending the correct number of digits for the Received number length defined in your system.
2. Verify all the digit strings that the switch should be sending.
3. Check that you have defined the corresponding Received number for every target line in your system.
4. Make sure that the published telephone numbers for your network are correct.

Selected lines read Not in service or Not available

When a user selects a line button and the set displays either `Not in service` or `Not available`, refer to the problem explanations in this section.

Possible problem

You have configured a line number associated with an E&M Trunk Cartridge DTMF receiver to appear at the telephone.

Solution

Reconfigure the line so that it does not appear at any telephone and configure another line to replace it at the telephone.
OR
Reconfigure the line as a different type and install trunk hardware to support the new type of line.

Possible problem

The Norstar system has taken an E&M line out of service because the far end did not respond to a disconnect signal from the Norstar system. The symptom would be accompanied by event code 263 in the System test log.

Solution

1. Check with the operators of the system at the far end and find out if their system is operating.
2. Check that your system hardware is receiving signals properly.
3. Check the trunk between your system and the far end system for a break.
4. Check that your trunk is properly configured.

5. Run a Maintenance session and go to the heading `Module status`.
6. Disable and enable the affected Trunk Cartridge.

Possible problem

The Norstar system has detected no response on an E&M line from the system at the far end. The symptom will be accompanied by Event code 265 in the System test log.

Solution

Check with the operators of the system at the far end and get them to troubleshoot their system.

Possible problem

The line is connected to a DTI which is currently not in service.

Solution

1. Check if the green LED on the DTI is flashing to indicate that service is suspended.
2. Check if any yellow LEDs are on to indicate an alarm or error condition.
3. Check if the red test LED is on to indicate that a continuity loopback test is running.
4. Check that the cable connecting the DTI to the termination point from the central office or network is properly connected.
5. Check that the DTI is properly inserted in the ICS.
6. Run a Maintenance session to verify the status of the DTI.

Possible problem

The line has been disabled for maintenance purposes.

Solution

Enable the line.
OR
If the line will be out of service for some time, configure another line to replace it on the telephone.

Possible problem

The loop or line has not been provisioned.

Solution

Provision the loop or line.

Selected line pool displays: No free lines

If the user selects a line pool and the telephone displays `No free lines`, refer to this section for solutions.

Possible problem

If this happens often, there are not enough lines in the line pool to serve the number of line pool users.

Solution

If the line pool contains loop start trunks, enter programming and move under-used loop start trunks from other line pools into the deficient line pool.
OR
If the line pool contains E&M trunks, order more trunks from the telephone company or private network vendor. Install

additional Trunk Cartridges of the appropriate type. In programming, add the new trunks to the deficient line pool.

Problems with optional equipment

Analog Terminal Adapter

1. Check the connections to the jack.
2. Check the connections to the ATA.
3. Disconnect the ATA and replace it with a working telephone. If the telephone still works properly, the ICS and/or the station modules (SM) are operating properly.
4. Verify that the programming has been done as described in the *Programming Record* and the *Norstar Analog Terminal Adapter Installation Card.*
5. If the trouble seems to be in the ICS or SM, double-check all wiring and programming options. Also refer to *Problems with BRI service* on page 615 or *Data Module down* on page 620.

   OR

   If the trouble seems to be with the ATA, disable the ATA and replace it with a known working one.

Running a Maintenance session to test an ATA

1. Run a Maintenance session to ensure that the ATA is not disabled. See *Port/DN status* on page 530.
2. Disable the port connected to the ATA using `Port/DN status`.
3. Enable the port connected to the ATA using `Port/DN status`.

Auxiliary ringer

1. If the auxiliary ringer is used for `Schedules` (Night, Evening, or Lunch service), ensure that `Schedules` is activated from the control telephone.
2. Check the wiring between the auxiliary ringer generator and the ringing device. Refer to the auxiliary ringer wiring chart.
3. Check the wiring between the auxiliary ringer generator and the distribution block:

Auxiliary ringer wiring

Feature	Pin
Auxiliary ring (Make)	44 (Yellow-Brown)
Auxiliary ring (Common)	19 (Brown-Yellow)

4. Ensure that the auxiliary ringer contacts are operating properly by checking with an ohmmeter across the auxiliary ringer pin contacts listed above.
5. Check that the auxiliary ringer pin contacts are programmed to operate in conjunction with any or all of the features in the auxiliary ringer programming chart shown below.

Auxiliary ringer programming

Feature	Programmed in
Auxiliary ringer	Terminals&Sets
Auxiliary ringer	Lines
Schedules	Services

The current capacity of the Norstar relay contacts is 50 mA DC. They are designed to operate with the auxiliary ringer generator, or equivalent.

External paging

1. Use the Button Inquiry feature ([⊙] [*] [0]) to verify the feature of a programmable memory button.
2. Check the wiring between the 50-pin connector and the paging amplifier or between the connections shown in the external paging wiring chart.

External paging wiring

Feature	Pin
Page out (Tip)	40 (Black-Slate)
Page out (Ring)	15 (Slate-Black)
Page (Make)	41 (Yellow-Blue)
Page (Common)	16 (Blue-Yellow)

3. Test external paging [⊙] [6] [2] to ensure that it is working. The nominal output signal from the Norstar ICS is 100 mV across 600 Ω.

Music on Hold/Background Music trouble

Although Music on Hold and Background Music are separate features, they share the same wiring and customer-supplied music source.

1. Ensure that the proper feature access code ([⊙] [8] [6]) is turned on. Adjust the volume using the volume control bar.
2. Use the Button Inquiry feature ([⊙] [*] [0]) to verify the feature on a programmable memory button.
3. If there is trouble with Music on Hold or Background Music, check `Featr settings` in `System prgming`.
4. Check the wiring between the music source and the 50-pin connector. See *Wiring charts* on page 260.

5. Ensure that the music source is turned on, is operational, and the volume control is set properly.
6. Any music source with a low-output impedance, less than 3,300 Ω, can be connected. The output level must be less than one volt.

KIM not working

The key interface module (KIM) that attaches to a 7316E digital phone to create a central answer position (CAP) can be reset in two ways.

- If you want to maintain the programming, you can warm start the module by physically unplugging the module from the telephone. When plugged back in, the module will perform a startup. Try this first when you receive an Addon error message on the telephone display.
- If you want to restart the module and erase the programming, you can perform one of two cold starts described below.

Cold starting the KIM

If the KIM does not recover after a warm reset, or if you want to reset the programming for the KIM, there are two types of cold starts for the modules:

For both types of cold starts:

1. Unplug and replug the 7316E line cable.

   The telephone restarts and all the icons flash.
   When the telephone icons stop flashing, the KIM module icons start flashing.

2. When the KIM icons start flashing, do one of the following:

- **KIM single-module cold start**

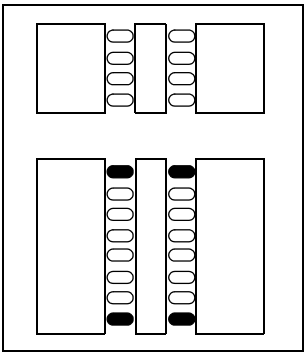

If you just want to cold start an individual module, on that module, simultaneously press the two top and two bottom buttons on the lower button set, as shown in the following diagram. The KIM displays a random pattern of icons as the KIM resets.

- **KIM multi-module cold start**
  If you want to cold start all the KIMs attached to your telephone, simultaneously press the top two buttons on the upper button set, and the bottom two buttons on the lower button set, as shown in the following diagram.

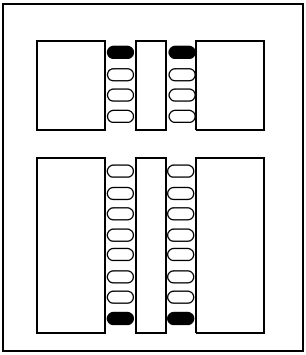

Problems with trunk cartridges service

Check first for user problems, then wiring and programming errors before replacing Norstar equipment.

Notify service provider of T1 or PRI signaling disruption.

Notify your T1 or PRI service provider before disconnecting your T1 or PRI lines, removing power to your system, or performing any other action that disrupts your T1 or PRI signaling. Failure to notify your T1 or PRI service provider may result in a loss of T1 or PRI service.

1. Check that the cartridge is properly inserted in the ICS or Trunk Module.
2. Run a Maintenance session to ensure that the cartridge is not disabled.

If the problem persists:

If the Trunk Cartridge is installed in the ICS and the AC power is present and the LED indicator on the ICS is off, replace the ICS.

If the Trunk Cartridge is installed in a Trunk Module:

1. If AC power is present and the LED indicator on the Trunk Module is off, replace the Trunk Module.
2. Replace the fiber cable.
3. Replace the Trunk Cartridge.
4. Replace the Expansion Cartridge.
5. Replace the ICS.

Refer to *Installation* on page 227 for information about replacing components.

Digital Trunk Interface trouble

1. Run a Maintenance session to verify that the Trunk Cartridge is enabled and that the lines are provisioned.
2. Check the LEDs on the front of the DTI:

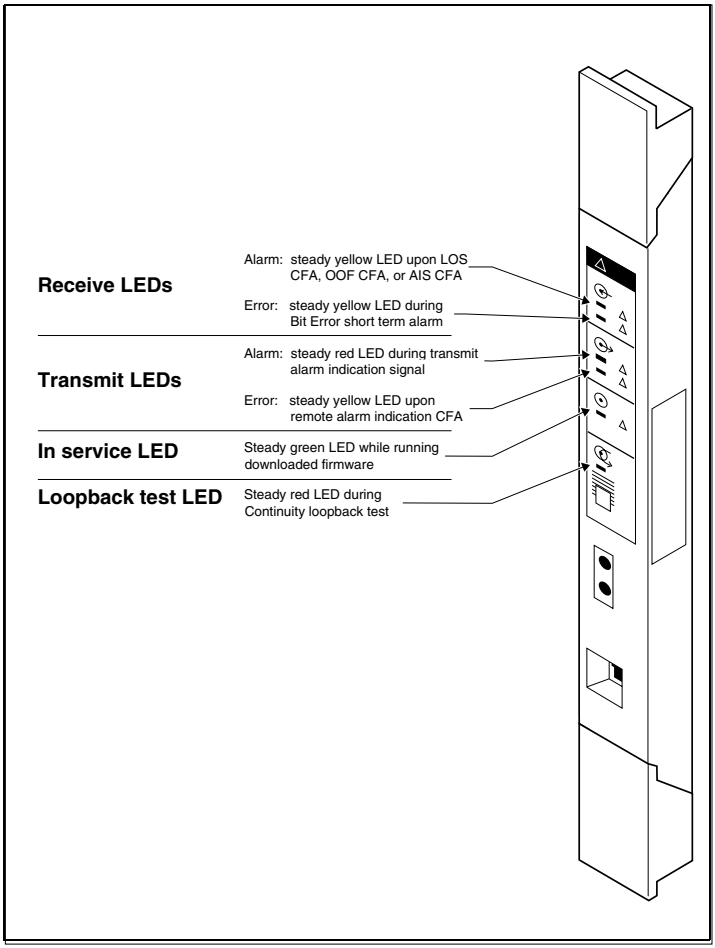

- **Receive Alarm** — yellow LED on indicates a problem with the digital transmission being received. This half-duplex link is unusable.
- **Receive Error** — yellow LED indicates a minor error as a result of degraded digital transmission. Possible causes are an ohmic connection, water ingress, or too long a loop.
- **Transmit Alarm** — red LED on indicates an inability to transmit. Alarm indication signal (AIS) is being transmitted to the terminating switch. This half-duplex link in unusable.
- **Transmit Error** — yellow LED on indicates a remote alarm indication (RAI) carrier failure alarm (CFA) is being sent to the terminating switch. If the Transmit Alarm is not on, this indicates a far-end or cable problem.
- **In service** — a flashing green LED indicates that the T1 or PRI trunks are out of service because of a running loopback test, or because the DTI is being initialized.
- **Loopback test** — red LED on while a continuity loopback test is running.
- **All LEDs flashing continuously** — the DTI is being initialized.

3. Run a Maintenance session and any loopback tests as appropriate.
4. Check the pinout of the cable that connects the DTI to the termination point from the T1 or PRI service provider or the external channel service unit, and check that the cable is properly connected.
5. Check with your T1 or PRI service provider to see if through-fed repeaters are used on the T1 or PRI span. The DTI does not provide the DC connection required for through-fed repeaters.

If through-fed repeaters are used on the T1 span, disable the internal CSU and connect the DTI to an external CSU.

6. If the problem persists, replace the DTI.

Notify service provider of T1 or PRI signaling disruption.

Notify your T1 or PRI service provider before disconnecting your T1 or PRI lines, removing power to your system, or performing any other action that disrupts your T1 or PRI signaling. Failure to notify your T1 or PRI service provider may result in a loss of T1 or PRI service.

Monitoring the T1 or PRI signal

If you are finding minimal faults with the T1 or PRI signal, you can monitor the signal to try and isolate the problem. The monitor jack on the DTI faceplate provides non-intrusive, bridged in-service monitoring of the T1 or PRI signal. Connect a protocol analyzer or other test equipment into the monitor jack to monitor the signal received from the network, and the signal transmitted by Norstar.

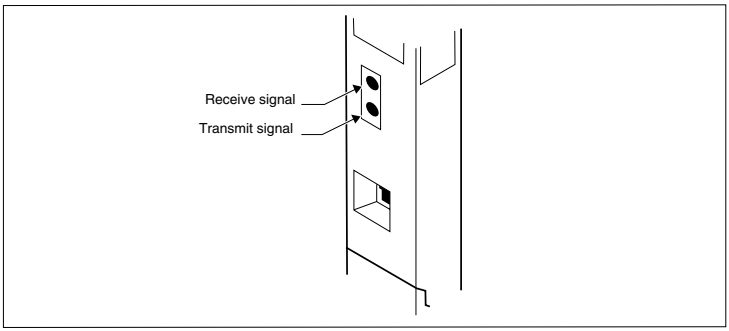

Problems with BRI service

Each LED on front of a BRI-ST or BRI-U Card corresponds with a loop, or indicates an overall state of the BRI connections.

BRI Card indicators

LED status	S, T or U-NT loop	S or U-LT loop
on	normal operation	
off	no synchronization with ISDN network	no synchronization with TE
all flashing	Card is not recognized by ICS (not configured in Hardware as a valid BRI loop). *All the LEDs on a BRI Card are flashing* on page 616.	
bottom LED only flashing	ICS is downloading firmware to the card; card is new or has changed location, or Feature Cartridge has been upgraded	

The BRI card is connected to the ISDN network (U loop) but the LED for one of more loops is not lit

Possible problem

The physical connection or configuration for the network connection is not correct (no Layer 1).

Solution

1. Verify the wiring from the network to the distribution block.
2. Verify the wiring from the distribution block to the ICS.
3. Use a Meridian 2500 set to test for data on the BRI trunk.

4. Test the network connection by connecting Bellcore standard terminal equipment (TE) directly to the network.
5. Verify that the loop is provisioned.
6. Verify that the loop is properly configured, including the proper loop type, SPIDs, and Network DNs.
7. Disable and re-enable the BRI Card.
8. Disable and enable the module for the Card.

Out of service displays when a BRI is selected (LED for loop is lit)

Possible problem

The loop is configured incorrectly. Layer 1 is present but Layers 2 and 3 are not working.

Solution

1. Verify that the SPIDs and Network DNs are programmed correctly in Hardware.
2. Verify that the loop and lines are provisioned.

All the LEDs on a BRI Card are flashing

Possible problem

The card is not configured properly.

Solution

Verify that the loop is properly configured, including the proper loop type, SPIDs, and Network DNs.

Possible problem

The card is not recognized by the ICS.

Solution

1. Verify that an Expansion Cartridge with Clocking, or Clocking Cartridge is installed in the ICS.
2. Replace the card with another card of the same type.

Caller hears one ring and then a fast busy signal when placing a call on a BRI line

Possible problem

CACH or EKTS, which are not supported by Modular ICS, is included in the ISDN services package.

Solution

1. Contact your service provider and ensure that CACH or EKTS are not part of the ISDN services package. These services must be turned off at the switch.
2. Verify that the network DNs have been programmed correctly, and verify the numbers with your service provider.

ICS down

1. If AC power is present and the LED indicator on the ICS is off, replace the ICS power supply.
2. Disconnect all central office and station lines from the ICS. Power down the ICS by unplugging it.

Replacing the ICS power supply

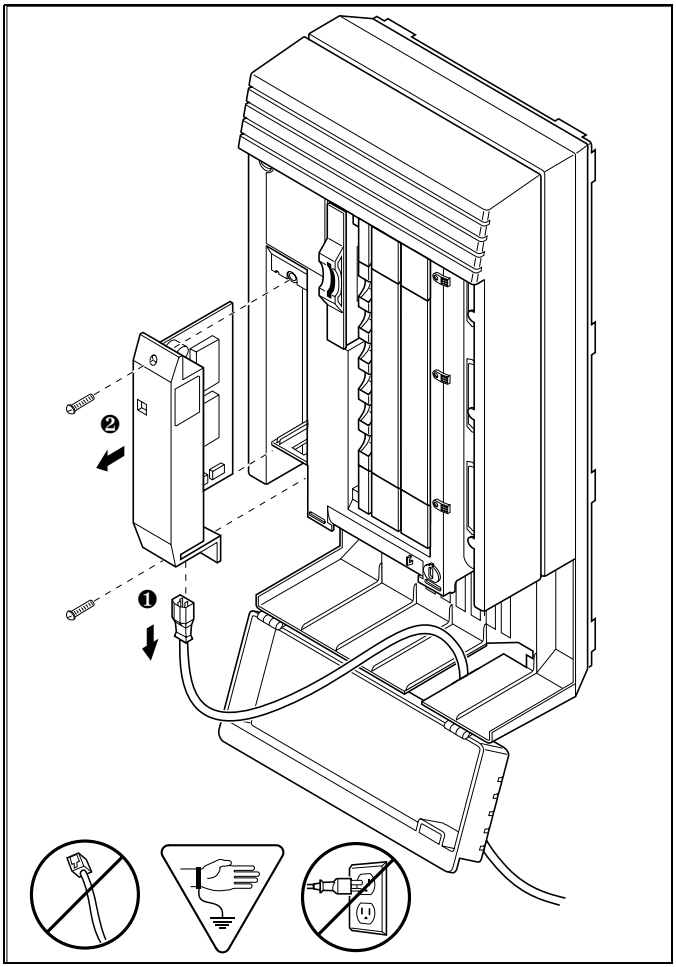

Trunk or Station Module down

1. Run a Maintenance session to ensure that the Trunk Module is not disabled. See *Module status* on page 537.
2. Disable the module using the `Maintenance` heading `Module status`.
3. Enable the module using the `Maintenance` heading `Module status`.
4. For Trunk Module

   Check the external line by terminating a single-line telephone directly on the distribution block, or equivalent, which connects to the Trunk Module.
5. For Station Module

   If the Station Module is still down, power down, then power up the ICS.

If the problem persists

1. If AC power is present and the LED indicator on the Trunk Module is off, replace the Trunk Module.
2. Replace the fiber cable.
3. Replace the Trunk Cartridge.
4. Replace the Expansion Cartridge.
5. Replace the ICS.

Refer to *Installation* on page 227 for information on replacing components.

Data Module down

1. Run a Maintenance session to ensure that the module is not disabled. See *Module status* on page 537.
2. Disable the Data Module using `Module status`.
3. Enable the Data Module using `Module status`.
4. If the Data Module is still down, power down, then power up the ICS and the Data Module.

If the problem persists

1. If AC power is present and the LED indicator on the Data Module is off, replace the Data Module.
2. Replace the Fiber cable.

Problems for network or remote users

Remote feature code gets no response

Possible problem

A Norstar user has called into another Norstar system and is trying to activate a remote feature but gets no response after dialing the feature code.

Solution

1. Make sure that the remote caller is dialing the feature code correctly. Use the asterisk (*) character, followed by the feature code, to activate a remote feature.
   Do not use [ ] for accessing features on a remote Norstar system.
2. Make sure that the remote user is dialing tones, not pulses, once the call is answered.

Dialed number gets ringback and the wrong person

Possible problem

The digits sent by a switch at a central office or in the private network did not match any Received number, the Auto DN, or the DISA DN. The call has been routed to the prime telephone for the incoming trunk.

Solution

1. Verify that the switch is sending the correct number of digits for the Received number length defined in your system.
2. Verify all the digit strings that the switch should be sending.
3. Check that you have defined the corresponding Received number for every target line in your system.
4. Make sure that the published telephone numbers for your network are correct.

Dialed number gets stuttered dial tone instead of ringback

Possible problem

The remote caller has tried to reach a Norstar target line, but has reached a trunk with DISA instead.

Alternatively, the Norstar system has mapped incoming digits onto the DISA DN.

Solution

1. Verify all the digit strings that the switch should be sending.
2. Check that you have defined a corresponding Received number for every target line in your system.
3. Check that you have defined the correct DISA DN for your system.
4. Make sure that the published telephone numbers for your network are correct.

Dialed number gets dial tone instead of ringback

Possible problem

The remote caller has tried to reach a Norstar target line, but has reached the Norstar system instead. Norstar has mapped the incoming digits onto the Auto DN.

Solution

1. Verify all the digit strings that the switch should be sending.
2. Check that you have defined the corresponding Received number for every target line in your system.

3. Check that you have defined the correct Auto DN for your system.
4. Make sure that the published telephone numbers for your network are correct.

Dialed number gets busy tone

Possible problem

The target line that the incoming digits map onto is busy, and there is no prime telephone for the incoming trunk.

Solution

For maximum call coverage, make sure that you configure a prime telephone for every incoming trunk.

Dialed number does not get through

Possible problem

The digits sent by a switch at a central office or in the private network did not match any Received number, the Auto DN, or the DISA DN. There is also no prime telephone assigned for the incoming trunk. In this case, the caller may hear overflow tone from the Norstar system or a recorded message from the originating switch.

Solution

1. Configure a prime telephone for every incoming trunk.
2. Verify that the switch is sending the correct number of digits for the Received number length defined in your system.
3. Verify all the digit strings that the switch should be sending.

4. Check that you have defined a Received number for every target line in your system.
5. Make sure that the published telephone numbers for your network are correct.

Possible problem

The Norstar system did not receive some or all of the incoming digits.

Solution

1. Check that the system hardware is receiving signals properly.
2. Verify that the switch is sending the correct number of digits for the Received number length defined in your system.
3. If the switch at the far end is sending pulse signals, make sure they are being sent at the proper rate.
   Pulse digits must be 300 ms or more apart for Norstar to receive them.

Possible problem

If remote callers are having difficulty getting through from the public network, there may be a problem with your DID Trunk Cartridge.

Solution

1. Connect a single-line DTMF telephone to a DID trunk input on the DID Trunk Cartridge.
2. Use the single-line telephone to enter a Received number that has been programmed for a target line in your system. Listen for ringback.

3. If you do not hear ringback, check that the target line is assigned to a telephone and that there is a prime telephone assigned for the DID trunk.
4. If you now hear ringback, but you also hear the noise of your unanswered call ringing, check the cross-connections. If all the cross-connections are correct replace the Trunk Cartridge.

Possible problem

If remote callers are having difficulty getting through from the private network, there may be a problem with your E&M/ DISA Trunk Cartridge.

Solution

1. Check the cross-connections for the E&M/DISA Trunk Cartridge.
2. If the E&M trunks are connected to another Norstar system, make sure that connections have been made as indicated in *Installation* on page 227.
3. Use the following table to check for correct voltage on the E&M/DISA leads:

Voltages on E&M leads

Leads	Voltage: active	Voltage: inactive
V_{T-R}	125 mV AC on steady dial tone	0 V AC
V_{T1-R1}	125 mV AC on steady dial tone	0 V AC
V_{E-SG}	0 V DC to -5 V DC	-48 V DC
V_{M-SB}	0 V DC to + 2 V DC	-48 V DC

Dialed DISA number gets ringback instead of stuttered dial tone

The remote caller has dialed a DISA number, but has instead reached a target line, or has been routed to the prime telephone for the auto-answer trunk. The Norstar system has mapped the incoming digits from a switch onto a target line, or has been unable to map the digits anywhere.

Solution

1. Verify that the switch is sending the correct number of digits for the Received number length defined in your system.
2. Verify all the digit strings that the switch should be sending.
3. Check that you have defined the correct DISA DN for your system.
4. Make sure that the published telephone numbers for your network are correct.

Dialed DISA number gets dial tone instead of stuttered dial tone

Possible problem

The remote caller has dialed a DISA number, but has reached the Norstar system instead. The Norstar system has mapped the incoming digits from a switch onto the Auto DN.

Solution

1. Verify that the switch is sending the correct number of digits for the Received number length defined in your system.
2. Verify all the digit strings that the switch should be sending.

3. Check that you have defined the correct DISA DN for your system.
4. Make sure that the DISA DN and Auto DN are different enough to prevent misdialing.
5. Make sure that the published telephone numbers for your network are correct.

DISA user gets overflow tone when entering COS password

Possible problem

The remote caller may have entered an invalid password.

Solution

Check programming under COS passwords and verify that the caller has a valid password.

Possible problem

The remote caller may have entered an asterisk (*) as one of the six digits.

Solution

Instruct remote callers to enter their COS password correctly: enter six digits.

Possible problem

The remote caller may have entered a number sign (#) as one of the six digits.

Solution

Instruct remote callers to enter their COS password correctly: enter six digits. The number sign (#) may be entered after the sixth digit, but is not required.

Possible problem

The remote caller may have waited more than 15 seconds between entering digits.

Solution

Instruct remote callers to enter their COS password correctly: enter six digits, and do not pause too long between digits.

Possible problem

The caller may be dialing from a rotary-dial telephone or from a push-button telephone that uses pulse signaling.

Solution

Inform remote callers that they must dial from a push-button telephone that uses DTMF tone signaling.

Dialed feature code gets overflow tone

Possible problem

The remote caller does not have access to that feature.

Solution

1. If the call came in on a trunk with DISA, check the Class of Service that is associated with the COS password of the remote caller. If it is too restrictive, modify the remote package assigned to the COS password, or assign another COS password that is more suitable.
2. If the call came in on a trunk without DISA, check the remote package that you assigned to the incoming trunk. Make sure that it gives the appropriate access to the remote caller.

Possible problem

The feature code is not valid.

Solution

1. Make sure that remote callers have a correct listing of the features that are programmed for remote access.
2. Ensure that remote callers are dialing the feature code correctly. Press [*] followed by the feature code to activate a remote feature.

Possible problem

The caller may be dialing on a rotary-dial telephone or on a push-button telephone that uses pulse signaling.

Solution

Inform remote callers that they must dial from a push-button telephone that uses DTMF tone signaling.

Dialed feature code gets busy tone

Possible problem

A resource that the remote feature uses may currently be in use. For example, a remote caller trying to use the paging feature would get a busy tone if the auxiliary speaker were being used at the time.

Solution

If repeated attempts to use the remote feature get busy tone, there may be a malfunction in a resource that the feature uses. Check that the remote feature hardware is functioning normally.

Line pool access code gets overflow tone

Possible problem

If the published line pool access code is valid, the remote caller does not have access to that line pool.

Solution

If the incoming trunk answers with DISA, give the remote caller a COS password that permits access to that line pool.
OR
Change the remote package for the incoming trunk so that it permits access to that line pool.
OR
Give the remote caller a line pool access code that is permitted within the Class of Service on the incoming trunk.

Possible problem

If the published line pool access code is invalid, the system has attempted, without success, to match the invalid code to a Norstar target line internal number, and there is no prime telephone for the auto-answer trunk.

Solution

1. Make sure that the published line pool access codes are correct.
2. Check that the line pool access codes have been entered correctly under Access codes in System prgming.

Possible problem

The caller may be dialing from the network on a rotary-dial telephone or on a push-button telephone that uses pulse signaling.

Solution

Inform remote callers that they must dial from a push-button telephone that uses DTMF tone signaling.

Line pool access code gets ringback

Possible problem

The published line pool access code is invalid. The system has routed the call to the prime telephone for the incoming trunk.

Solution

1. Make sure that the published line pool access codes are correct.
2. Check that the line pool codes have been entered correctly under Access codes in System prgming.

Line pool access code gets busy tone

Possible problem

There are not enough lines in the line pool to serve the number of users.

Solution

If the line pool contains loop start trunks, enter programming and move under-used loop start trunks from other line pools into the deficient line pool.
OR
If the line pool contains E&M trunks, order more trunks from the telephone company or private network vendor. Install additional E&M Trunk Cartridges. In programming, add the new trunks to the deficient line pool.
OR
Create a separate line pool for remote users only.

Possible problem

There are DID lines in the line pool.

Solution

In programming, make sure that there are no DID lines in any of the line pools.

Dialed number gets no response

Possible problem

The remote caller, after accessing a line in a line pool, may have started dialing before the far end was ready to receive.

Solution

Instruct remote callers to wait until they hear feedback before entering any digits.

Possible problem

There may be a malfunction in the line that the remote caller accessed.

Solution

If the problem is persistent, check that all lines in the affected line pool are functioning normally.

Possible problem

There may be a malfunction in the system that the caller is trying to reach.

Solution

Inform the operators of the system at the far end that the dialed number is not getting through.

Specifications

Norstar system

Service tone cadences

Tone	Cadence (seconds)
Busy	0.5 on / 0.5 off
Expensive Route	0.3 on / 0.3 off (3 bursts)
Overflow	0.25 on / 0.25 off
Ringback	2.0 on / 4.0 off
Confirmation	1.0 on / 1.0 off (three bursts followed by no tone)
Recall	1.0 on / 1.0 off (three bursts followed by steady tone)
Ring splash	0.2 on (one burst)

Power specifications

Characteristic	ICS	TM	SM
Voltage V ac	110-120	110-120	110-120
Current A rms (max)	2.6	1.75	1.0
Frequency Hz	47-63	45-70	45-70
Crest factor	4.0	4.0	4.0

Telephone loop specifications

Characteristic	Value
Loop resistance	64 ¾ (300 m of 0.5 mm wire or 1000 ft. of 24 AWG wire)
Loop length	300 m (1000 ft.) without station auxiliary power supply 790 m (2500 ft.) with station auxiliary power supply
Minimum voltage at telephone	10 V dc

Current at telephone (idle)	45 mA nominal
Current at telephone (active)	80 mA maximum

Electrical requirements

Characteristic	Spec/Value
Electrostatic discharge	
ICS and telephones	IEC 801-2 severity level 3 maximum of 15 kV with a 300¾/150 pF probe
Connectors	IEC 801-2 severity level 2
Radiated immunity	maximum of 5 V/m from 100 kHz to 1 GHz
Conducted immunity	maximum of 3 V rms from 0.1 MHz to 30 MHz

Environmental requirements

Characteristic	Spec/Value
Operating temperature range	0°C to 50°C (32°F to 122°F) IEC. 68-2-1 Tests Ad and IEC 68-2-2, Method A
Storage temperature range	-50°C to 70°C (-31°F to 158°F) IEC. 68-2-2 Test Bd
Humidity above 34°C (93°F)	5% to 95% (non-condensing) <52 mbar of water vapor pressure

ISDN network synchronization*

Characteristic	Spec/Value

* These specifications only apply when the system clock is not derived from a Digital Trunk Interface connection to the network.

Digital Trunk Interface

Network interface

Characteristic	Spec/Value
Physical	RJ48C 8-pin modular jack
Line rate	1.544 +/- 32 Mbps
Framing	Superframe/extended superframe*
Line code	AMI/B8ZS*
Impedance	100 ¾

* These values are set in Hardware programming. See the *Hardware on page 495* for details.

DSX1 operation

Characteristic	Value
Pre-equalization	0-210 m (0-700 ft.)*

* This value is set in Hardware programming. See the *Hardware on page 495* for details.

CSU operation

Characteristic	Spec/Value
Line build out	0, 7.5 or 15 dB*
Input dynamic range	0 to -26 dB (typical)
Performance reporting	Simultaneous support of TR 54016 or TIA-547A
Line loopback support	Remote activation/deactivation via in-band code or FDL as per TR 54016 or TIA-547A
Payload loopback support	Remote activation/deactivation via FDL as per TR 54016 or TIA-547A
Carrier failure alarms (CFA)	Alarm indication signal (AIS), Red Yellow

* This value is set in Hardware programming. See the *Hardware on page 495* for details.

Synchronization performance

Characteristic	Spec/Value
Stratum	4E

Digital trunk signaling support

Types	Options
Loop Start with answer and disconnect supervision	OSI interval* Pulse/DTMF dialing*
E&M	Immediate start (Pulse dialing only), Wink start, Delay start or ring-down tie line* Pulse/DTMF dialing*
DID	Immediate start (Pulse dialing only), Wink start or Delay start* Pulse/DTMF dialing* Ground start

* These values are set in Hardware programming. See the *Hardware on page 495* for details.

Local test support

Characteristic	Value
Monitor jack	Bridging via Bantam jack
Line loopback	activate/deactivate via maintenance*
Payload loopback	activate/deactivate via maintenance*
Card edge loopback	activate/deactivate via maintenance*
Continuity loopback	activate/deactivate via push button on faceplate*

* See *Tests on page 566* for details on running these tests.

Glossary

Symbols

7000 digital phone This telephone has a no display. It does have four memory buttons. (Note this telephone is only supported on systems running Profile 2, 3, or 4).

7100 digital phone: A telephone with a single line display and one programmable memory button without an indicator.

7208 digital phone: A telephone with a single-line display and eight programmable memory buttons with indicators. This telephone has a separate mute key and supports a headset

7316 digital phone: A telephone that has a two-line display, three display buttons, 16 programmable memory buttons with indicators, and 12 memory programmable buttons without indicators. This telephone has a separate mute key and supports a headset.

7316E digital phone: This telephone has the same functionality as the 7316 digital phone, with some additional features, such as a separate handsfree key, special display icons (when running on a MICS 6.1 or newer system), and CAP capability by adding KIMs.

7406 digital phone: The 7406 base station desk set can support three handsets, which function like the other digital phones on the system. It has six programmable memory keys.

7420/7430: These Nortel Networks Digital Mobility phones allow you to set up an extended cell of base stations that allow users to contact the system from a variety of locations within a site.

A

AbsorbLength: A setting that determines how many of the digits in a destination code will not be dialed by the system. AbsorbLength is assigned under `Destination codes` in `Services`.

access code: Different sequences of characters used to gain access to these Norstar features: Line pools, Call park, external lines, Direct-Dial telephone, Auto DN, and DISA DN.

alarm code: A number that appears on the alarm telephone display, informing you that the ICS has detected a fault in the system.

alarm telephone: A telephone that is designated to receive reports of Norstar system problems. This function is usually assigned to a prime telephone, but this can be changed under `Feature settings` in `Sys programmng`.

Analog Terminal Adapter (ATA): A device that permits analog telecommunication devices such as fax machines, answering machines, and single line telephones to be connected to the Norstar system. Programmed defaults for the ATA are automatically assigned by the Norstar system.

ANSI: American National Standards Institute.

Answer button: A telephone button with an indicator that is used to monitor another telephone. The answer button indicates incoming calls destined for the other telephone. Someone working at a telephone with answer buttons (an attendant, for example) can receive all

ringing and visual indication of incoming calls for other telephones, and answer those calls when necessary.

One telephone can have up to eight Answer assignments. An Answer DN is automatically assigned to a telephone memory button, if any are available. If no buttons are available, and on 7000 and 7100 digital telephones and Digital Mobility phones, Answer DNs must be set to Ring Only since there are no button appearances.

Answer DN: The internal or directory number (DN) of a telephone that is monitored by another telephone. You can assign up to eight Answer DNs to a telephone under Line Access in Terminals and Sets programming.

Autobumping: [✆] [8] [1] [5]
A feature that determines what the system does with new Call Log items when your Call Log is full. When Autobumping is on, a new log entry causes the oldest entry to be deleted. If Autobumping is off, your Norstar system does not log calls when your log is full.

autodial button: A memory button that, if programmed, provides one-touch dialing of external or internal numbers.

autolog options: [✆] [*] [8] [4]
A feature that allows you to select the type of calls that are stored in your Call Log. You can choose to log calls that were not answered by anyone within the system, to log calls that were unanswered at this telephone but which were answered elsewhere in the system, to log all calls answered and not answered at this telephone, or to not have calls automatically logged.

Automatic Dial: A feature that allows you to dial without having to pick up the receiver or select a line. You must have a prime line to use Automatic Dial. Automatic Dial is assigned under Dialing options in Terminals&Sets programming.

Automatic handsfree: A feature which automatically activates handsfree operation when you make or answer a call. Automatic handsfree is assigned under handsfree in Terminals&Sets programming.

Automatic Hold: A feature that automatically places an active call on hold when you select another line.Automatic Hold (Full AutoHold) is assigned in Lines programming.

Automatic Privacy: See Privacy.

Automatic Daylight Savings Time: A feature that switches the system to standard or daylight savings time at pre-programmed times. It is turned on or off under Daylight time in Sys prgrmmng.

Automatic Telephone Relocation: A feature that allows a telephone to retain personal and system programming when the telephone is plugged into a different Norstar modular jack. Automatic Telephone Relocation is enabled under Set relocation in Sys prgrmmng.

auxiliary ringer: A separate external telephone ringer or bell which can be programmed to ring when a line or a telephone rings. An auxiliary ringer may be programmed to ring only when the system is in a particular schedule. Programming of an auxiliary ringer is done in Services programming after the feature has been enabled under Capabilities in Terminals&Sets programming.

AWG: American wire gauge.

B

B channel (Bearer channel). An ISDN standard transmission channel used for voice or data transmission.

Base station: A hardware component that is mounted on walls and ceilings to provide a radio link to an office or other area where portable telephones are used. Each base station houses two radios that allow portables to send and receive calls through the ICS.

Background Music: A feature that allows you to hear music from the speaker of your Norstar telephone. It is available only if a music source has been attached to the ICS and the feature has been enabled under Feature settings in Sys prgrmmng.

Basic password: A one- to six-digit password that prevents unauthorized access to the most commonly-used telephone settings. The Basic password can be assigned and changed in Passwords programming.

Basic Rate Interface (BRI): An ISDN interface which uses two B channels and a D channel (2B+D).

Bearer channel: See B channel.

Business series terminals These terminals were developed to replace the Norstar M-series terminals. Therefore, their functionality closely parallels the M-series terminals.

button caps: Interchangeable plastic caps that fit over the buttons of legacy Norstar M-series telephones. They are used to indicate the features programmed onto each programmable memory button. Button caps are either pre-printed or have clear windows that allow you to insert labels.

Button Inquiry: [feature] [*] [0]
With this feature you can check the function of each programmable button on your system telephone.

C

Call Duration timer: [feature] [7] [7]
A feature that allows you to see how long you spent on your last call, or how long you have been on your present call.

Call Forward: [feature] [4]
A feature that forwards all the calls arriving at your telephone to another telephone in your Norstar system. To have calls forwarded outside the system, use Line Redirection.

Call Forward No Answer: A feature that forwards all calls arriving at your telephone to another designated telephone in your Norstar system after a specific number of rings. Call Forward No Answer is assigned under Capabilities in Terminals&Sets programming.

Call Forward On Busy: A feature that forwards all calls at your telephone to another designated telephone if your telephone is busy. This feature is assigned under Capabilities in Terminals&Sets programming.

Call Forward Override: An automatic system feature that allows you to call someone and ask them to stop forwarding their calls to you.

Call Information: [feature] [8] [1] [1]
Call Information allows you to display information about incoming calls. For external calls, you can display the caller name, telephone number and the line name. For an internal call, you can display the name of the caller and the internal number. You can obtain information about ringing, answered, or held calls.

Call Information Trunk Cartridge: The Trunk Cartridge that allows you to connect loop start trunks with Call Information capability to the Norstar system.

Call Log: [✆] [8] [1] [2]
Enter your Call Log to view a record of incoming calls. The log could contain the following information for each call: sequence number in the Call Log, name and number of caller, long distance indication, indication if the call was answered, time and date of the call, number of repeated calls from the same source, and name of the line that the call came in on. See Autobumping, Autolog options, and Call Log for further information.

Call Park: [✆] [7] [4]
With this feature you can place a call on hold so that someone can retrieve it from any other telephone in the Norstar system by selecting an internal line and entering a retrieval code.

The retrieval code appears on the display of your telephone when you park the call. You can park up to 25 calls on the system at one time.

Call Park Callback: See Callback.

Call Park prefix: The first digit of the retrieval code of a parked call. This digit cannot conflict with the first digit of any existing DNs, Line Pool access codes, the Direct-dial digit, or the external line access code. The default Call Park prefix digit is 1. It may be set to none, in which case Call Park is disabled. Call Park prefix is assigned under Access codes in Sys prgrmmng.

Call Pickup Directed: [✆] [7] [6]
A feature that allows you to answer a call ringing at any system telephone by entering the internal number of that telephone before taking the call. Call Pickup Directed is enabled under Feature settings in Sys prgrmmng.

Call Pickup Group: See Pickup Group.

Call Queuing: [✆] [8] [0] [1]
If you have several calls waiting at your telephone, you can invoke the Call Queuing feature to answer them in order of priority. Priority is given to incoming calls, followed by callback and camped calls.

Callback: If you park, camp, or transfer a call to another telephone and it is not answered there, it will ring again at your telephone. How long the system will wait before Callback occurs is set under Feature settings in Sys prgrmmng.

Camp-on: [✆] [8] [2]
A feature that allows you to reroute a call to a telephone even if all the lines on that telephone are busy. To answer a camped call, use Call Queuing or select a line if the camped call appears on your telephone. Priority is given to queued calls.

Camp timeout: The length of a delay before a camped call is returned to the telephone that camped the call. The length of delay is set under Feature settings in Sys prgrmmng.

Central answering position (CAP): A 7316E+KIM that provides additional memory buttons. An enhanced CAP (eCAP) is a 7316E+eKIM that has been designated as an eCAP under CAP/KIM assign in Sys prgrmmng. The eCAP provides backup answering by supporting line appearances and multiple appearances of target lines as well as hunt group designators. An eCAP can be used to monitor the telephones within a Norstar system.

Centralized voice mail and Auto Attendant: A Norstar VAM can be configured to service other systems connected to the Norstar where the

NVAM resides. The connection must be made using PRI SL-1 lines with the MCDN protocol active. Both a PRI and an MCDN software codes (as well as any required voice mail codes) are required for this feature.

Channel Service Unit (CSU): A device on the Digital Trunk Interface that is the termination point of the T1 lines from the T1 provider. The CSU collects statistics on the quality of the T1 signal. The CSU ensures network compliance with FCC rules and protects the network from harmful signals or voltages.

Class of Service (COS): The set of Norstar features and lines available to the user for a call. The Class of Service for a call is determined by the restriction filters and remote access packages assigned to the telephone in `Lines` programming. The Class of Service for a call can be changed by entering a six-digit Class of Service password. (Internal users cannot change their access to features with a COS password, only their restriction filters.) `Class of Service` and `Class of Service passwords` are assigned in `Passwords` programming. See Remote Access.

Class of Service password: [✆] [6] [8]
A six-digit code that allows you to switch from your current Class of Service to one that allows you to dial numbers prohibited by your current Class of Service.

CLID on busy Starting with version 6.1 systems, on telephones that allow CLID display, incoming calls that arrive when the telephone is busy will briefly display a CLID.

cold start: When all system programming is lost. This can happen because you have entered the Startup feature code [✆] [*] [*] [S] [T] [A] [R] [T] [U] [P], or after a major event, such as an extended power failure.

Combo Cartridge: A cartridge that allows you to connect Trunk Modules and Station Modules to the ICS to expand the system capacity for trunks and telephones. Combo Cartridges provide six-port or 12-port expansion and Services functionality with each cartridge. See also Expansion Cartridge.

Conference: [✆] [3]
A feature allows you to establish a three-person call at your Norstar telephone.

contrast adjustment: [✆] [*] [7]
Allows you to set the contrast level of your telephone display.

control telephone: A control telephone can place the lines for which it has responsibility in or out of a Service Mode.

The direct-dial telephone is a control telephone for directing calls to the extra direct-dial telephone. A telephone is made a control telephone and has lines assigned to it in Services programming.

Coordinated Dialing Plan: (CDP) This dialing plan uses a steering code to identify each node in a private network. This one-digit code becomes part of the set DN number rather than a separate code. In this way, system A might have codes in range 2100 to 2999, whereas system B might have codes in range 3100 to 3999.

COS: See Class of Service.

cursor: A short horizontal line that appears on the system telephone display to indicate that characters can be entered using the dialpad.

D

D channel (Data channel): An ISDN standard transmission channel which is packet-switched, and is used for call setup, signalling and data transmission.

Data channel: See D channel.

Data Communications Interface (DCI): A Norstar device that allows you to attach an RS-232 data device to the Norstar system.

data terminal: A device, such as a modem, that can be used to transfer data instead of sound over a telephone network. You cannot use Norstar programming to set up such devices. See the documentation that accompanies the device.

date: See Show Time or Time and Date.

defaults: The settings for all Norstar features when the system is first installed. Settings are changed from their defaults in programming. In this manual, default settings are shown in **bold** text.

Delayed Ring Transfer (DRT) to prime: After a specified number of rings, this feature transfers an unanswered call on an external line, to the prime telephone associated with that line. This feature is activated under Feature settings in Sys prgrmmng.

destination code: A two- to 12-digit number that the system interprets and then translates into the digits that you want dialed out. Both the code and its associated dialed digits are assigned under Routing service in Services programming.

DID trunk: See Direct Inward Dial trunks**.**

DID Trunk Cartridge: The Trunk Cartridge that allows you to connect DID trunks to the Norstar system.

dialing restriction: See Restriction filter.

dialing modes: [c] [*] [8] [2]
This feature allows you to set the dialing mode of your telephone. Norstar supports three dialing modes: Automatic Dial, Pre-Dial, and Standard Dial. All three modes support on-hook dialing, meaning you can dial a call without picking up the receiver. The special features of the Automatic and Pre-Dial modes are available only when you dial on-hook.

Digital Mobility phones 74XX: These telephones connect to the system through station modules connected to a Nortel Networks Digital Mobility controller.

Digital Trunk Interface: The Trunk Cartridge connects digital T1 AND ISDN trunks to the Norstar system.

Direct-dial: A feature that allows you to dial a designated telephone in your Norstar system with a single digit, such as the main receptionist. As many as five direct dial sets can be established. Each telephone in the system is assigned to one direct-dial telephone. There is a single, system wide digit for calling the assigned direct-dial telephone of any telephone. Direct-dial telephones are established in System programming. Telephones are assigned to a direct-dial telephone under Capabilities in Terminals&Sets programming.

Direct-dial #: A digit used system-wide to call the Direct-dial telephone. The digit is assigned under Access codes in Sys prgrmmng.

Direct-dial number: The digit used to call the direct-dial telephone.

Direct Inward Dial trunk: Trunks that allow direct inward dialing from the public network to the Norstar system.

Direct inward system access (DISA): The feature that allows remote users to dial directly into the Norstar system and use Norstar features. Callers will hear stuttered dial tone and will be required to enter a Class of Service password to gain access to the system. See Remote Access.

directed pickup: See Call Pickup Directed.

Directory number (DN): A unique number that is automatically assigned to each telephone or data terminal. The DN, also referred to as an internal number, is often used to identify a telephone when settings are assigned during programming.

Default DN assignments start at 221.

DISA DN: The received number assigned to the Norstar direct inward system access facility. If a caller dials a number that is assigned to the DISA DN, the caller hears stuttered dial tone and must enter a Class of Service password. Once the password is accepted, the caller hears system dial tone and can use Remote Access features. See Remote Access.

Disconnect Supervision: A setting that enables the Norstar system to detect if an external caller hangs up. Once an external caller hangs up, the Norstar system can disconnect its line. `Disconnect Supervision` is enabled under `Trunk/Line` data in `Lines` programming.

display: A liquid crystal display (LCD) on the telephone that guides you through feature operation and programming.

display button: Norstar system two-line display telephones are each equipped with three buttons located directly beneath the display. During feature operation or programming, some or all of these buttons may be used to provide further options. If an option is available, it is shown in the bottom row of the two-row display, directly above the corresponding display button. Display buttons are represented in this manual as underlined capital, such as OK.

Distinctive ring: Lines, telephones, and hunt group DNs can be configured with a distinctive ring that also determines the priority of a call.

DN: See Directory number.

Do Not Disturb: [ ] [8] [5]
A feature that stops calls from ringing at your telephone. Only Priority Calls will ring at your telephone. A line button will flash when you receive a call, but the call will not ring.

DTMF: See Dual tone multifrequency.

dual tone multifrequency: Two distinct telephone signaling tones used for dialing.

DTI: See Digital Trunk Interface.

E

E&M/DISA Trunk Cartridge: The Trunk Cartridge that allows you to connect E&M trunks to the Norstar system. The E&M Trunk Cartridge also allows DISA access to the system by providing DTMF receivers for auto-answer trunks.

Emergency 911 dialing: The capability to access a public emergency response system by dialing the digits 9-1-1. State and local requirements for support of Emergency 911 Dialing service by Customer Premises Equipment vary. Consult your local

telecommunications service provider regarding compliance with applicable laws and regulations.

emergency telephone: A single-line telephone, also referred to as a 500/2500 telephone, that becomes active when there is no power to the ICS.

evening schedule: See Schedules, and Services.

event message: Event messages are stored in the system log and displayed during a Maintenance session. They record a variety of events and activities in the Norstar system.

exceptions: See Overrides.

Expansion Cartridge: A cartridge that allows you to connect Trunk Modules and Station Modules to the ICS to expand system capacity for trunks and telephones.

There are two Expansion Cartridges: a two-port Expansion Cartridge and a six-port Expansion Cartridge. (See also Combo Cartridge.)

external call: A call to a destination outside the Norstar system.

External Call Forward: See Line Redirection.

external code: The number you dial to get an external line. By default it is 9, but this can be changed under `Access codes` in `Sys prgrmmng`. You do not always need an external code. It is primarily to support the 7000 and 7100 digital phones, and analog telephones connect to Analog Terminal Adapters or analog station modules.

external line: A line on your system telephone used for making calls to destinations outside the Norstar system.

external music source: See Music source.

external paging: A feature you can use to make voice announcements over an externally-mounted loudspeaker connected to the ICS. The external speaker is not a Norstar component and must be supplied by the customer.

F

feature button: Many Norstar features are invoked by pressing the Feature ([f]) button followed by a feature code. The feature button is also used to exit a feature.

Feature Cartridge: A replaceable cartridge containing the Norstar features. The Feature Cartridge is inserted into the ICS.

feature code: A number that is used to activate a particular feature.

Feature programming: [f] [*] [3] Allows you to program a feature code onto a memory button.

Forward: See Call Forward.

Full Autohold (on idle line): When this feature is on, if you select an available line and then do something that selects another line, the first line is put on hold. `Full Autohold` is enabled under `Trunk/Line` data in `Lines` programming.

Full handsfree: See handsfree.

G

Ground Start trunk: Ground start trunks offer the same features as loop start trunks, but are used when the local service provider does not support disconnect supervision for the digital loop start trunks. By configuring lines as ground start, the system will be able to recognize when a call is released at the far end. Ground start trunks are provided only by a DTI.

Group Listening: [6] [8] [0] [2]
A feature that allows you to have others in your office hear a caller through your telephone speaker. The caller hears you only when you speak into the receiver. They cannot hear other people in the office.

You can cancel Group Listen for the current call. Group Listen is cancelled automatically when you hang up the Group Listen call.

H

Handsfree: A feature you can use to make calls without using the telephone receiver. Full Handsfree is activated under Capabilities in Terminals&Sets programming. When it is activated, a handsfree/mute button is automatically assigned to the telephone.

Handsfree (HF) answerback: When activated, this feature automatically turns on the microphone at a telephone receiving a Voice Call so that the person receiving the call can respond without lifting the receiver. It is activated under Capabilities in Terminals&Sets programming.

Handsfree/mute button: See handsfree.

Hardware: A section in programming that shows what equipment has been installed in the ICS. This section is accessed by the installer.

headset: A head-mounted or ear-mounted telephone receiver that is used instead of the hand-held receiver. Headsets are not Norstar components and must be supplied by the customer.

Held (Line) Reminder: A system telephone rings and displays the message On hold: LINENAM when an external call has been placed on hold for a certain period of time. The Held Line Reminder feature and Remind delay are set under Feature settings in Sys prgrmmng.

HF Answerback: See handsfree answerback.

Hold button: [⌣]
This button is used to suspend calls so that the person using the telephone can perform another task without disconnecting the caller.

Hook Switch Flash: See Link time.

Host system signaling: (Also referred to as end-to-end signaling.) System telephones can access a remote system or dial a number on an alternate carrier by means of host feature activation, such as Link, Pause and Run/Stop.

Hospitality The Hospitality features allow business which use hospitality telephones, or room-based telephones, to control access, alarms, and maintenance duties through the telephones.

Hotline: This feature automatically calls a pre-assigned number when the telephone receiver is lifted or the handsfree/mute button is pressed. A Hotline number can be an internal or external number. Hotline is assigned under Capabilities in Terminals&Sets programming.

Hunt group: The hunt groups feature allows a group of sets to be called by a single directory number ensuring that calls are easily routed to the appropriate group.

I

I/C: An abbreviation of intercom.

ICS (integrated communication system): The central hardware component in the Norstar system. The ICS has its own processor and memory, and provides a physical point of

connection for the various types of devices, telephones, and expansion modules used in Norstar.

The ICS can function on its own as a basic system (with 32 system telephones and up to 48 external lines), or with the addition of Trunk Modules (TM) that supports more external lines, or Station Modules (SM) that support more system telephones.

Installer password: A one-to six-digit password that prevents unauthorized access to programming. The Installer password can be assigned and changed in `Passwords` programming.

Integrated Services Digital Network (ISDN): A digital telephone service that allows for a combination voice and data connection over a single, high-speed connection. ISDN service can operate over the same copper twisted-pair telephone line as analog telephone service.

intercom button: A button that provides access to internal lines used for calls within a Norstar system and access to external lines through a line pool or external code. A telephone may be assigned zero to eight Intercom buttons. This is done under `Line access` in `Terminals&Sets` programming.

intercom keys: See Intercom button.

internal line: A line on your telephone dedicated to making calls to destinations inside your Norstar system. An internal line may still connect you with an external caller if you use it to access a line pool or to pick up a call using Norstar call handling features such as Call Park or Call Pickup Directed.

internal number: A number, also referred to as a Directory Number or DN, that identifies a Norstar telephone or device.

internal user: Someone using a system telephone within a Norstar system.

ISDN: See integrated services digital network.

ISDN DN: A directory number (DN) used by ISDN terminal equipment connected to the ICS. The system uses a maximum of thirty ISDN DNs.

ISDN Call Connection Limitation (ICCL) This feature piggybacks on the call initiation request and acts as a check at transit PBX points to prevent misconfigured routes or calls with errors from blocking channels.

K

Key indicator module (KIM) This hardware unit allows you to expand the receive capability of a 7316E digital phone. You can configure the resulting CAP into an enhanced CAP (eCAP) to support lines, multiple appearances of target lines, and hunt group designators.

Key service unit (KSU): See ICS.

L

Last Number Redial: [✆] [5]
A feature that allows you to redial the last external number you dialed.

Fixed line:
A telecommunications line between two service points leased from a communications carrier for private use, usually incurring a monthly service rate. Fixed lines setting is used solely by data modules.

Least cost routing: See Routing service.

line: The complete path of a voice or data connection between one telephone (or other device) and another.

Lines: A programming section that allows you to assign settings to each trunk and external line. Lines programming can be done by an Installer or a System Coordinator Plus. A System Coordinator can program the name of a line.

Line number: A number that identifies an external line. The total number of lines depends on how many Trunk Modules are installed.

Line Pool: [✆] [6] [4]
A group of lines used for making external calls. Line pools provide an efficient way of giving a telephone access to external lines without taking up many line buttons. A line is assigned to be part of a line pool under `Trunk/Line` data in `Lines` programming.

Line Redirection: [✆] [8] [4]
A feature that allows you to redirect all calls on an incoming line to a destination outside the Norstar system. Once a line is redirected it cannot be answered within the Norstar system. The system may be set up to give a brief ring when a call comes in on a redirected line, under `Capabilities` in `Terminals&Sets` programming.

This feature differs from Call Forward in two ways: It redirects only external calls, not internal calls, and it redirects calls to destinations outside the system. Call forward redirects calls only to destinations inside the Norstar system. See Call Forward.

Link: [✆] [7] [1]
If your Norstar system is connected to a Private Branch Exchange (PBX), you can use a Link signal to access special features. The Link signal can also be included as part of a longer stored sequence on an External Autodial button or in a Speed Dial code. The Link symbol (■■) uses two of the 24 spaces in a dialing sequence.

Long Tones: [✆] [8] [0] [8]
A feature that allows you to control the length of a tone so that you can signal devices such as fax or answering machines which require tones longer than the standard 120 milliseconds.

Loop Start Trunk Cartridge: The Trunk Cartridge that allows you to connect loop start trunks to the Norstar system.

Lunch schedule: See Schedules, and Services.

M

Maintenance: A type of programming that is used to diagnose and repair problems in the Norstar system. Maintenance requires no programmable settings.

Malicious Caller ID (MCID) This feature is a European ETSI-based network feature that allows a user to use [✆] [8] [9] [7] record the caller information at the service provider.

memory buttons: Buttons that can be programmed to dial frequently used features or numbers automatically.

MCDN: Meridian Customer Defined Network is a PRI SL-1 protocol that allows Norstar systems on a network with a Meridian system to share some Meridian call features.

message: A feature that allows you to send a message to another Norstar user. The Message feature also allows you to know if you have any messages waiting and maintains a Message Waiting List to keep a record of your internal messages and your (external) voice mail messages.

Message Waiting Indicator: PRI lines can provide the signal that cause the set to display a message-waiting message, or light a lamp on the set to indicate a voice message. If your system

is serviced by a remote voice mail system from a third-party vendor, the Meridian attendant telephone uses the MIC/MCK buttons to activate the MWI lamp on telephones at other sites.

Modular ICS NVRAM cartridge: A replaceable cartridge containing the Norstar features, commonly known as the Feature cartridge. The ICS NVRAM cartridge is inserted into the ICS.

Modular ICS ROM software cartridge: A PCMCIA cartridge containing the Norstar NA-MICS 4.0 features. The ICS ROM software cartridge is inserted into the Modular ICS NVRAM cartridge.

Module: A component of the Norstar 0X32 key system. Includes the Integrated Communication System, Trunk Module and Station Module.

Module status: A heading in Maintenance programming that shows what types of Trunk Cartridges are connected and whether they're busy, disabled, or malfunctioning.

Monitoring See Silent Monitoring.

Move Line buttons:
[e] [*] [8] [1]
A feature that allows you to move assigned lines to different buttons (with indicators) on your telephone.

Music source: A radio or other source of music can be connected to the Integrated Communication System to provide music for the Music on Hold and Background Music features. A music source is not part of the Norstar system and must be supplied by the customer.

Multiple least cost routing (MLCR): This term refers to the ability to define more than one route for a destination code when schedules are used. The system will attempt each route in turn to find an available route before routing the call to overflow.

N

Names: Names can be assigned to System Speed Dial numbers, external lines, telephones, and service schedules. This is done in programming. You can use up to 16 characters to name a System Speed Dial number, and seven characters to name a telephone, line, or schedule. If a Name has not been assigned, the line number or DN will appear on the display instead of a name.

Network Call Diversion (NCD) Norstar Network Call Diversion (NCD) is a network function that allows forwarding and redirection of calls outside the Norstar network when using an ETSI ISDN line. Functionality is similar to that of External Call Forward (ECF).

Network DN: A number supplied by the ISDN network service provider for ISDN terminal equipment.

Night schedule: See Schedules, and Services.

NT1 (Network termination type 1): A device used to connect the U interface of a service provider and the S or T interface (customer equipment). The Modular ICS can act as an NT1 when equipped with a BRI-U2 or BRI-U4 Card.

O

On hold: A setting, programmed under Feature settings in Sys prgrmmng, that controls whether external callers hear music, periodic tones, or silence when they are placed on hold.

OPS: Off premise station.

OPX: Off premise set.

overlay: See Programming overlay.

overflow: A setting in Routing Service that allows users to decide what path an outgoing call will take if all the lines used in a particular route are in use when the call is made.

Overlap dialing: This feature allows you to turn off enbloc dialing for ETSI PRI lines (profile 2, only) to enable the telephone submit a series of numbers for a PRI pool, then to receive a dial tone from the PRI line before the final call numbers are dialed.

Overrides: One component of a restriction filter. Overrides are numbers you can dial even if they are forbidden by a more general restriction. See Restrictions.

P

Page: [✆] [6] [0]
A feature you can use to make announcements over the Norstar system. You can make page announcements over the telephone speakers and/or external speakers.

Page Time out: A setting that controls how long a Page Announcement can last. It can be assigned under Feature settings in Sys prgrmmng.

Page zone: An area in the office that receives internal page announcements independently of the rest of the office.

Each page zone is identified by a number. Telephones are assigned to page zones under Capabilities in Terminals&Sets programming.

Park prefix: See Call park prefix.

Park timeout: The time before an unanswered parked call is routed back to the telephone that parked it. Park timeout is configured under Feature settings in Sys prgrmmng.

Password: A password is a specific sequence of digits that you enter to gain access to Norstar programming, to override dialing restrictions, or to use remote access with DISA.

Passwords: A programming section that allows you to assign or change COS passwords, Call log passwords, or any of the programming passwords. Under Passwords programming, you can only modify the passwords for your level of programming.

Pause: [✆] [7] [8]
A feature that enters a 1.5-second delay in a dialing sequence on an external line. This is often required for signaling remote devices, such as answering machines, or when reaching through to PBX features or host systems. The Pause symbol (⏸) uses one of the 24 spaces in a dialing sequence. For pulse dialing, [*] inserts a 1.5 second pause into the dialing sequence.

PBX: private branch exchange.

Pickup Group: [✆] [7] [5]
A telephone can be placed into one of nine call pickup groups. A call ringing at a telephone within a pickup group can be picked up at any other telephone within the same pickup group. A telephone is assigned to a pickup group under Capabilities in Terminals&Sets programming.

Pool: See Line pool.

portable telephone: See Digital Mobility phones. portable telephone

Pre-dial: A feature that allows you to enter a number and check it on your telephone display before it is actually dialed. If the number is incorrect, you can edit it. The number is dialed only when you pick up the receiver or select a line.

Primary Rate Interface (PRI): An ISDN interface which uses

23 B channels and a D channel (23B+D).

Prime line: The line on your telephone that is automatically selected when you lift the receiver, press the handsfree/mute button or use an external dialing feature.

A Prime Line is assigned to a telephone under Line access in Terminals&Sets programming.

Prime Set (prime telephone): A telephone that provides backup answering for incoming calls on external lines. The prime telephone for a line will ring for any unanswered calls on that line. A prime telephone is assigned to a line under Trunk/Line data in Lines programming.

Priority Call: [✆] [6] [9]
If you get a busy signal when you call someone in your office, you can interrupt them for an urgent call. This feature is enabled for a telephone under Capabilities in Terminals&Sets programming.

Privacy: This feature determines whether a Norstar user may select a line in use at another telephone and join an established call. Privacy is enabled under Trunk/Line data in Lines programming, but can be turned on and off by users during individual calls.

Private line: See Private to.

Private network: A telephone network consisting of owned or leased telephone lines used to connect different offices of an organization independently of the public network.

Private Network Identifier (PNI) this is an identifying digit or set of digits assigned to each system in a private network with a Meridian system. These codes are provided by the Meridian system administrator when the node is brought on to the network.

Private to: Allows you to select the telephone that will use the line exclusively. The line cannot appear on any other telephone, except the prime telephone for that line. Private lines cannot be placed into line pools. Private lines are assigned under Trunk/Line data in Lines programming.

Programmed release:
[✆] [*] [8] [9]
A feature that performs the function of the [☎] button in a programmed dialing sequence.

programming: Setting the way the Norstar system will work. Programming includes system-wide settings and individual telephone and line settings.

programming overlay: A paper template that is placed over the four memory buttons with indicators on the two-line display telephone you use during system programming. The overlay labels indicate the special function that each of the four buttons takes on in programming.

public line: An external line that can be assigned to any telephone and to many telephones. A line is assigned as Public under Trunk/Line data in Lines programming.

public network: The regular telephone network that connects most homes and businesses.

Public Safety Answering Point (PSAP): This is the first point of contact a caller reaches after dialing 911.

pulse/tone dialing: An external line setting for pulse or tone dialing. Pulse is the traditional method of dialing used by rotary-dial or push- button single-line telephones. Tone dialing allows telephones to communicate with other devices such as answering machines.

Tone dialing is required to access the features that PBX systems may offer or to use another Norstar system remotely.

R

recall: See Link time.

receiver: The handset of a telephone.

receiver card: An abbreviated list of system feature codes that is stored under the telephone receiver. The card is found on a perforated sheet that comes with a system telephone.

Regression Code: Restores the previous system security number so that previously applied UTAM Activation Codes and Portable Credit Codes can be reentered to restore full system operation. Also required in cases of system recovery. This code cannot be reused.

Remind delay: A feature that causes a telephone to beep and display the message `On hold: LINENAM` when a call has been on hold for a programmable period of time. This period is the Remind delay.

Remote access: The ability to dial into a Norstar system from outside the system and make use of selected Norstar features. The lines, features, and dialing capabilities available to a remote user are determined by the Class of Service. If the remote access line is answered with DISA, the user must enter a Class of Service password to gain access to the Norstar system features.

remote access dial restriction: See Remote restriction.

Remote capability: A subset of Norstar features that are available to users connected through remote access.

Remote monitoring: A feature that allows an off-site technician with a PC call in and troubleshoot your system through the built-in modem.

Remote paging: This feature allows remote users to use the Norstar paging feature. Access to this feature is governed by the Class of Service for the call. See Remote Access and Class of Service.

Remote restriction: A restriction filter applied to a line in order to control which digits can be dialed during an incoming remote access call. It is the equivalent of a set filter for a remote user.

remote user: Someone who calls into a Norstar system from a telephone outside that system and uses Norstar features or lines. See Remote Access.

Restriction filter: Through a combination of restrictions and overrides, restriction filters prevent certain telephone numbers or feature codes from being dialed. Restriction filters can be applied to lines, sets, specific lines on a set, and to Class of Service passwords. The Norstar system can handle up to 100 restriction filters.

Restriction service: A Services section that allows you to assign alternate dialing filters to lines, telephones, lines on a particular telephone, and alternate remote filters to lines at specified times of the day and on specified days.

restrictions: One component of a Dialing filter. Restrictions are numbers you cannot dial when that dialing filter is in effect. See Exceptions.

Ring Again: [⊙] [2]
A feature that can be used when you can't get through to someone on your Norstar system because their telephone is busy or there is no answer. Ring Again instructs the Norstar system to inform you when they hang up or next use their telephone.

ring group: A setting under Services that allows you to assign a number of different telephones to ring during one of the schedules.Up to 20 ring groups can be programmed by an installer or a system coordinator plus.

ring type: [feature] [*] [6]
A feature that allows you to select one of four distinctive rings for your telephone.

ring volume: [feature] [*] [8] [0]
A feature that allows you to set the volume at which your telephone rings.

ringing service: A Services section that allows you to make additional telephones ring at specified times of the day and on specified days.

Rls button: Ends a call in the same way that hanging up the receiver does. The Release button may also be used to end programming, Maintenance sessions, and feature operations.

Routing: See Routing service.

Routing service: A programming section that allows outgoing calls to be directed automatically based on the numbers a caller dials. For Norstar systems linked in a network, routing can create a transparent or coordinated dialing plan. It can also be used to direct calls to the least expensive lines according to a Services schedule (sometimes called least cost routing).

Run/Stop: [feature] [*] [9]
A feature that creates a break point in a programmed external dialing sequence. When you press a programmed key, the system dials the number up to the run/stop. When you press it again, the system dials the digits following the run/stop.

S

S loop: A type of loop provided by a BRI-ST Card. It connects the ICS to ISDN terminal equipment which uses an S interface.

SAPS: See station auxiliary power supply.

Saved Number Redial: [feature] [6] [7]
A feature that allows you to save the number of the external call you are on (providing you dialed the call) so that you can call it again later.

Schedules: Any of six different sets of services that can be applied to your Norstar system. A schedule can be activated manually from a control telephone or activated automatically at specified times. See also Services.

Selective line redirection: See Line Redirection.

Service modes See Services.

Service Profile Identifier: See SPID.

Services: A programming section that allows you to assign which telephones ring, which restrictions apply, and which call routing is used during any of six different schedules. There are three services: Ringing service, Restriction service and Routing service, all found in Services programming.

set: A telephone.

Set Copy: A programming section that allows you to copy programmable settings from one telephone to another of the same type. Set Copy provides two options: duplicating System Data and User Data, or duplicating System Data only. Set Copy does not provide the same copy capability as COPY, which is more selective of the settings that can be duplicated.

Set filter: See Restriction filter.

Set lock (telephone lock): This feature allows you to limit the number of features that may be used or programmed at a telephone. Full set lock allows very few changes or features, Partial set lock allows some changes and features, and No set lock allows any change to be made and any feature to be used. Set lock is assigned under Capabilities in Terminals and Sets programming.

Set relocation: See Automatic Telephone Relocation.

Show Time: [e] [8] [0] [3]
While on a call, accessing this feature allows you to see the current date and time on the Norstar telephone display.

Silent Monitoring

This feature allows a user with a two-line display telephone that has been designated as a supervisor telephone, to monitor Hunt group calls from external sources using [e] [*] [2] [5] [5].

Software keys: A programming section used to enable the optional Remote monitoring feature. One setting provides a System ID, which an installer or system coordinator plus then uses to request three password keys from the Nortel Customer Response Center. Once these three passwords have been entered, the system will permit Remote monitoring.

SPID (Service Profile Identifier): A number that identifies devices connected to an ISDN network. A device may have more than one SPID depending on the number of channels it uses. SPIDs may be used to identify terminal equipment to the ICS, or to the service provider.

Startup programming: When a Norstar system is first installed and powered up, Startup programming must be performed before any programming can be done. Startup initializes the system programming to defaults.

Station: An individual telephone or other Norstar device.

Station Auxiliary Power Supply (SAPS): A device which provides power to a Norstar telephone that is connected more than 300 m (975 ft.) and less than 1200 m (3900 ft.) from the ICS, or to a CAP module.

Station Module: A module that allows you to connect up to 16 additional telephone to your Norstar system.

Station set test:
[e] [8] [0] [5]
A series of diagnostic tests for these components of a Norstar telephone: display, buttons, handset, speaker, and power.

System coordinator: The person responsible for customizing the Norstar system through programming and for helping co-workers use the Norstar system.

System coordinator password: A one- to six-digit password that prevents unauthorized access to programming. The System coordinator password can be assigned and changed in Passwords programming.

System coordinator plus: A system coordinator who also performs technical and maintenance functions for the Norstar system.

System coordinator plus password: A one- to six-digit password that prevents unauthorized access to programming. The System coordinator plus password can be assigned and changed in Passwords programming.

System coordinator plus programming: A combination of common and installer programming settings.
Press [e] [*] [*] [C] [O] [N] [F] [I] [G], then [S] [C] [P] [L] [U] [S] to access System coordinator plus programming.

System coordinator programming: The programming settings that are most commonly changed once the Norstar system is installed.
Press [e] [*] [*] [C] [O] [N] [F] [I] [G], then [A] [D] [M] [I] [N] to access System coordinator programming.

system data: An option in the Set Copy function. System Data refers to the programmable system settings that apply to all telephones and lines.

System programming: A programming section that allows you to assign and maintain certain settings on the Norstar system. System programming is performed by an installer or system coordinator plus.

System speed dial code: A three-digit code (001 to 255) that can be programmed to dial a telephone number up to 24 digits long. System speed dial codes are programmed for the entire Norstar system under the System Speed programming heading.

System Startup: See Startup programming.

System Startup access code: To begin System Startup, press [e] [*] [*] [S] [T] [A] [R] [T] [U] [P]. An Installer password is required before Startup programming can begin.

System ID: The System ID (or System Security number) can be accessed on any programming telephone display by pressing [e] [*] [*] [S] [Y] [S] [I] [D], or [e] [*] [*] [7] [9] [7] [4] [3].

System-wide Call Appearance (SWCA) keys [e] [*] [5] [2] [1] to [e] [*] [5] [3] [6] These 16 feature codes can be assigned to buttons with indicators on a group of telephones to provide call appearance for incoming calls that can be answered by any telephone in the group. At the same time, the indicator displays the current status of the call.

T

T1: Digital carrier system or line that carries data at 1.544 Mbps.

T loop: A type of loop provided by a BRI-ST Card. It connects the ICS to an ISDN network using an NT1.

Target lines: Lines used to answer incoming calls only. A target line routes a call according to digits it receives from an incoming trunk. They are referred to by line numbers in the same way as physical lines.

TE: See Terminal equipment.

TEI (Terminal Endpoint Identifier): A digit used to identify devices which are using an ISDN connection for D-channel packet service.

Telco features: A programming section that allows you to specify the external telephone numbers that are dialed by the Message feature to retrieve voice messages, or to set up CLASS (CMS) services for lines and sets. Telco features are accessed by an installer or a system coordinator plus.

Terminal Endpoint Identifier: See TEI.

Terminal equipment (TE): A generic term for devices that connect to an ISDN network. Examples of ISDN TE are ISDN telephones, computers equipped with ISDN cards and video terminals.

Terminals and Sets: A programming section that allows you to assign and change settings that apply to the telephones and other devices connected to the Norstar system. Terminals and Sets programming is performed by an installer or a system coordinator.

Time and date: A programming section that allows you to manually change time or date. The time and date can also be changed by pressing [*] [*] [T] [I] [M] [E] and entering the Basic password or one of the programming passwords.

Transfer: [↻] [7] [0]
A feature that allows you to redirect a call to another telephone in your Norstar system, over a network or outside your Norstar system.

Transfer Callback: If a transferred call is not answered after a specific number of rings, the call will return to the telephone that made the transfer. The number of rings is assigned under Feature settings in System programming. Transfer Callback does not apply to calls transferred externally.

Trunk: The physical connection between the Norstar system and the outside world using either the public telephone system or a private network.

Trunk Answer: [↻] [8] [0] [0]
A feature you can use to answer a call on any line that has an active Ringing service Service Mode, even if that line does not appear on your telephone. Trunk Answer is enabled in Services programming.

Trunk Anti-Tromboning (TAT): This MCDN network feature is a call-reroute feature that works to find better routes during a transfer of an active call. This feature acts to prevent unnecessary tandeming and tromboning of trunks. This action occurs after the speech path has been established.

Trunk Module: A module that allows you to install additional Trunk Cartridges in your system to provide up to 12 additional trunks.

Trunk route optimization: (TRO) This is a private network feature that provides routing for forwarded calls along the shortest or best route on the private network.

U

U interface: A two-wire ISDN interface used for both network connections and terminal connections to the ICS.

U-LT: A type of loop provided by a BRI-U2 or BRI-U4 Card. It connects the ICS to ISDN terminal equipment which uses a U interface.

Uniform Dialing Plan: (UDP) This type of dialing plan uses a location code to identify each node on a private network. Dialing sequence: (destination code)+(location code)+DN.

U-NT loop: A type of loop provided by a BRI-U2 or BRI-U4 Card. It connects the ICS to an ISDN network.

Unsupervised line: A line for which disconnect supervision is disabled. If an external caller hangs up, the Norstar system does not detect the disconnection and does not hang up its line. See Disconnect Supervision.

User Data: User Data is an option in the Set Copy feature. User Data refers to the personal settings that are unique to an individual telephone, and are not programmed for the system. User Data is programmed at each telephone.

These settings, for example, include user Speed Dial and the assignment of programmable memory buttons.

User Filter: See Restriction filter.

User Preferences: a programming section that allows you to assign autodialers, user speed dial codes, display contrast, and other settings to a specific telephone or person. You do not have to program these settings at the person's telephone. User preferences are assigned in Terminals and Sets programming.

User Speed Dial: [✆] [*] [4]
Three-digit codes (256-279) can be programmed to dial external telephone numbers. User Speed Dial numbers are programmed for each telephone, and can be used only at the telephone on which they are programmed.

V

Voice Call: [✆] [6] [6]
A feature you can use to make an announcement or begin a conversation through the speaker of another telephone in the Norstar system. The telephone you call will not ring. Instead, the person you call will hear a beep and then your voice. Their telephone will beep periodically to remind them that their microphone is open.

Voice Call deny: [✆] [8] [8]
A feature that prevents your telephone from receiving Voice Calls.

Voice message center: If you have subscribed to Call Display services you can receive visual Voice Message Waiting Indication, providing your telephone has a display. If you have Voice Message Waiting Indication, you can program the telephone numbers required to access up to five different Voice Message Centers. You can also program which of the five Centers is to be accessed by each specific line.

W

Wait for dial tone: [✆] [8] [0] [4]
A feature that causes of sequence of numbers to pause until dial tone is present on the line before continuing to dial. The Wait for dial tone symbol (▪▪S) uses two of the 24 spaces in a dialing sequence. This feature requires a Services or Combo Cartridge.

wireless: See Digital Mobility phones.

Index

Symbols

[e]
- **79743 (System ID) 319
- **CONFIG ([e]**266344) 332
- **DIALPAD ([e]**3425723) 326
- **LINE 320
- **PROFILE ([e]**7763453) 325
- **SET (set programming) 320
- **STARTUP ([e]**7827887) 327
- **SYSID 319
- **SYSID ([e]**79743) 493
- **TIME ([e]**8463) 419
- *7, Contrast Adjustment 591
- 1, message reply enh 440
- 811 Call Display 358
- 819 ONN blocking 470

Numerics

0X32
- using old modules 217

1st display, programming 359
25-pair connector 243
2-way DID, PRI dialing plan 125
2-way service 126
7000
- accessing external lines 458

7100
- accessing external lines 458

7316
- programming overlay 309

7316E
- programming telephone 309

900 CbC service
911, restrictions 351

A

absorb length, zero 402
access
- controlling on a network 103
- line pool programming 339
- passwords for programming 304

access codes
- auto DN 459
- carrier codes 461
- CDP 113
- conflicts 113, 455
- default codes 455
- direct dial number
  - system programming 458
- DISA DN 459
- external code 458
- line pool 120
- line pool and access code 463
- line pool codes 455
- listing 306
- long distance 404
- park prefix 457
- private access code 460
- programming 455
- remote line access 462

access package, COS 103
access services, CbC services 471
adaptive, BRI sampling 515
administrative set, Hospitality services 225
advanced private network, see APN and MCDN
AEM
- cable connections 243
- see also ASM

alarm
- check active 577
- check current 542
- codes 548
- CSU 577
- network evt log 546
- short term 578
- system administration log 545
- troubleshooting 551

Alarm 10 551
Alarm 37 549
Alarm 37 551
Alarm 40 551
Alarm 41 551
Alarm 42 551
Alarm 43 551
Alarm 44 551
Alarm 45 551

Alarm 46 551
Alarm 47 551
Alarm 50-X 552
Alarm 51-X 550, 552
Alarm 52-X-Y 550, 552
Alarm 61-X-Y 550, 552
Alarm 62-X-Y 550, 553
Alarm 63-Z 550, 553
Alarm 68-Z 550, 554
Alarm 75 554
Alarm 76-X 550, 554
alarm messages
    programming alarm set 439
alarm set
    programming 439
alarm telephone 236
alarms
    hospitality 479
    Hospitality services 225
allow last number redial 355
allow redirect 346
allow saved number redial 355
alpha tagging
    CLID match 446
alternate call ringing 381
analog
    message reply enh 440
    name and number blocking 470
    trunk data settings 362
    trunk type 363
analog access lines (AAL) 501
analog E&M trunks, private network 95
analog network loss treatment 501
analog station module
    cable connections 243
    connecting 242
    message reply enh
    see also analog extension module
Analog Station Module, see ASM and AEM
analog telephones, external code 458
Analog Terminal Adapter, see ATA or ATA2
analog trunk
    E&M 95
    see also loop start trunks 93
analog trunk cartridge 232
analog VSC
    programming 489
ANI
    E&M and DID lines on DTI 374
    programming number
    Winkstart 374
ANI number 362
answer calls
    SWCA lines 442
answer DNs
    DECT 342
    programming 342
    view 342
answer keys
    phantom DN 441
    programming 441
    setting features 441
answer mode 362, 369
answer timer 500
answer with DISA 362, 370
ANY key
    destination codes 396
APN
    also see MCDN 138, 144
    network features 128
    networking features 127
    using MCDN protocol
appearance
    auto privacy 368
    DID lines, default numbering 337
    DID target line 92
    E&M trunk manual-answer 96
    hunt group 421
    loop start trunk, manual answer 93
    message waiting indication 358
    network route 120
    trunks 90
    using internal line for private call 183
appearances
    setting SWCA controls 445
    SWCA keys 442
applying template 305
appr only 167, 172, 336, 342, 421
appr&ring 167, 172, 336, 342, 421
ascending mode, service provider 126
ascending, B-channel sequence 498
ASM
    analog station module 506
    see also AEM
    verifying status 506

assign
answer DNs 342
CAP lines 339
intercom buttons 341
line pools 339
lines 336
prime line 340
assigned lines, viewing 338
assigned, BRI DNs 516
ATA
accessing external lines 458
for OPX applications 292
optional equipment list
settings 346
troubleshooting 606
attn attempts 479
Attn duration 479
auto associate, SWCA 445
auto attendant, bypassing
auto DN
access codes 92
conflicts 367, 395, 459
DID trunk 101
PRI trunk 101
private network auto-answer 101
programming 459
rec'd number length 459
received number length 464
auto number identification, see ANI
auto privacy 362
F83 368
programming 368
Auto time&Date
programming 435
auto-answer
answer with DISA 370
BRI trunks 336
DID 91
disconnect supervision 369
E&M trunks 95
E&M/DISA 94
loop start trunk and DISA 93
loop start trunks 93
no DISA 93
private network 101
remote access 100
remote access trunks 99
remote restrictions 380
restriction filters 100
trunks, DISA 106
autodial, network calls 121
automatic ongoing line selection 365
automatic route selection, see routing
automatic telephone relocation
programming 293
Automatic Time and Date 435
auxiliary equipment
wiring chart 265
auxiliary ringer 297
call transfer 371
Hunt Groups 427
maximum voltage 297
optional equipment list 199
programming 371, 388
Terminals&Sets 346
troubleshooting 608
trunk type data 362
available, BRI DNs 516

B

B1 and B2 directory numbers 260, 261—262
back 311
backboard 234
background music
installation 297
programming 298, 430
troubleshooting 608
backspace (bksp) button 312
back-to-back cross-connections 282
backup
maintaining records 209
backup, NRU 391
basic
answer key 441
hospitality 478
basic password
description 304
programming the password 416
basic programming
common changes 334
Basic Rate Interface, see BRI, see also ISDN
B-channels
BRI card 512
port numbering 260

progrramming static DID 2-way service 126
sequence, PRI 498
BchanSeq 498
BchnSeq mode, static DID and two-way DID 126
Bellcore standard 230
Bellcore/National ISDN Users Forum (NIUF) 75
bracket 233
break-in, MCDN 164
BRI
answer mode 369
assign DNs 516
assign lines/loops 336
assigning SPIDs to T and NT loops 512
becoming a clock source 518
BRI-ST cartridge wiring 287
BRI-U wiring 273, 275
call type 513
card 65—70, 511—516
card programming 511
cards 270
clock source loops, power up or down 518
DNs on loop 516
D-packet service 514
handling calls 81
internet connection 86
lines on T/NT loop 511
lines pooled 81
loop DN 516
loop type on card 511
loopback test 573
loops on card 511
LT loop (Lp) 514
name and number blocking 470
network DNs 513
network loop programming 87
network name display supporting protocols 467
network wiring 276
number of B-channels 512
ONN blocking 490
POSTA 87
profile support 323, 324
programming lines 81
programming VSC 489
SPID 336
ST card 232
ST card wiring 270, 271
T network wiring 276
target line, if busy 367
TEIs 515
terminal equipment 83
test network connection 230
trunk 97
trunk data settings 362
trunk module locations 507
trunk type 363
U2 card 232
U4 card 232
U-NT network wiring 277
view card 496
BRI (Basic Rate Interface)
U2 trunk modules 236
U4 trunk modules 236
BRI, see also ISDN
bridge taps 204
BRI-ST
terminating resistors 240
trunk modules 263
BRI-U2, trunk modules 263
BRI-U4, trunk modules 263
broadcast
hunt groups 424
ILG upgrade to Hunt Groups 224
broadcast ring 336
Business name
send name display, PRI lines 524
business name
network name display 469
programming 466
BusName, see business name and call display
Busy 534
busy
busy tone 425
lines, hunt groups 425
overflow set, hunt groups 426
routes, overflow routing 409
button prgrming 348
buttons
Feature 309
Hold 309
programming button definitions 311
programming telephones 309

Release 309
volume control 309

C

cable trough 243, 250, 300
cadence, service tone 635
call attendant, SL-1 network
call blocking, ONN programming 470
call by call
card settings 498
PRI limits 474
programming 473
programming PRI limits 475
programming service selection 474
protocols referenced with services 473
routing map table 499
routing table 393
routing, all 499
routing, incoming calls 498
routng, none 499
service selection for PRI 471
services, supporting protocols 471
supported services 471
usage metrics 584
Call by Call, see also CbC
call descriptions, public network 176
call disconnect, OSI 369
Call Display
programming 357
using CLASS assignment 357
call display
ANI number 374
CI trunk cartridge 232
order of display 359
outgoing call 344
services, customizing 357
call diversion
networks 187
call forward, hunt groups 421
call information feature 359
call information trunk cartridges
loop start signaling 94
call log
call log opt'ns 348
call log pswrds 306
information, power fail 302
password 414
resetting 437
set for lines 358
set or line 436
space 360
space, available spaces 437
call log set 358
call park prefix, conflicts 395
call pickup, message answer enh 440
call restriction
hospitality services 478
line restrictions 378
programming filters 349
users 378
call routing
between switches 120
carrier codes 142
CDP 113, 149
CDP, Public DN 112
dialing plan
description 112
E&M dialing plans 115
external routing code 122
hunt groups 420
incoming DID calls 123
internal DID calls 123
prime set overflow 368
private network, routing codes 138
programming CbC services 474
Public DNs 142
restriction filters 120
setting up access code table 114
tandem networks 136
UDP 146
using E&M trunks 183
call setup, ISDN and OLI 343
call transfer, auxiliary ringer 371
call type, BRI card 513
call usage, monitoring set 90
call waiting indications, see also CWI
call, using destination codes 405
called ID
network name display 468, 469
programming 359
called number, OLI 343
Called Party Number, see CDN
caller features
through private network 111
through public network 110
within system 110

Caller ID set 357
caller ID, see call display services
caller identification, ANI number 374
caller information, see also CID 128
calling party, BusName, programming 466
camp timeout, programming 431
camp-on
    MCDN 162
CAP
    line assignment 339
    line keys 337
    moving a set 450
    programming assignment 449
capabilities
    listing 306
    programming 345
card
    answer timer 500
    CO fail 501
    edge loopback test 568
    I/F levels 501
cards on ICS 495
cards on KSU
    listing 306
    show module 495, 496
carrier access code
    branded outwat calls 393
    conflicts 461
    description 142
    programming 461
carrier failure
    alarms 574
    standard 501
Carrier Identification Code (CIC) 461
cartridge
    checking the state 539
    E&M Trunk 203
    enabling 540
    enabling/disabling 507
    inserting 239
    installation 231
    installation tips 235
    loop start trunk 203
cause code 476
CbC
    destination codes 390
    dialing plan 122
    incoming routing for DISA 82
    network 121
    Private DN over Tie 122
    requirements, no CbC 122
    see also call by call
    service options 500
CCI, emergency transfer conditions
CCITT 304
CDN
    DISA
    service types 82
    Target Line Receive Digit Length 82
CDP
    access codes 113
    call routing 113, 149
    call scenarios 149
    dialing plan features 450
    dialing sequence 113
    dialing string 148
    DN range 148
    DNs 112
    overview 112
    public DN 112
    SL-1 network features
central answering position, see CAP
central office, ANI/DNIS service 374
change
    Hunt Group auxiliary ringer 427
change DN type 306
change DNs 263, 306
change, button 312
changing DNs 430
Channel Service Unit, see CSU, CSU internal
channel, disabling PRI 565
charts, wiring 260
checking the system version 529
CI trunk cartridge
    installing 232
    wiring chart 280
CIC (Carrier Identification Code) 461
Class of Service password, see COS
CLASS trunks 435
clear line data 496
CLI, programming in pools 344
CLID
    CLID match for alpha tagging 446
CLID match 446
CLID set

network name display 469
clock
automatic date and time 435
hospitality, setting time 479
clock source
becoming a source 518
description 517
network clock settings 518
primary reference 517
programming 521
sample configurations 519—521
secondary reference 517
timing master 517
clocking cartridge 69
ClockSrc 505
CO fail, TI and PRI 501
combo cartridg, installation planning 198
common dialing plan 127
common settings
list 306
programming 411
Companion
equipment list 199
hunt group 421
installing base stations 300
interface headings 306
listing 306
UTAM, upgrading 208
cond pswd, programming 417
configuration programming, default access codes 455
conflicts 465
connect wiring 255
connected name, network name display 468
connection
expansion modules 242, 258
stand alone 70
contact, external paging 299
continuity loopback test 569, 572
control circuit interface, see CCI
control set
activating services 381
assigning to lines and sets 382
programming 382
schedules 383
controlling schedules 386
coordinated dialing plan, see CDP
coordinator, system password 303
copy
COS password 412
display button 312
list of copy/not copy 318
remote access packages 463
set programming 316, 335
single, range, all 316
system data 316
telco features 357
to a group of telephones, not part of a range 317
to a range of telephones 317
to a single telephone 316
trunk/line data 363
user data 316
COS
auto DN 459
auto-answer E&M trunk 96
auto-answer system 100
auto-answer, no DISA 93
calls answered with DISA 459
changing 103
copy 412
dialing capabilities 99
dialing filters 103
incoming remote call 103
line filter 413
maximum 412
network 103
password 92, 94
programming 412
programming tips 412
public call 177
remote access package 462
remote access with DISA 100
remote pkg 414
restrictions 92
security 103
user filter 413
with DISA 106
credit card verification 86
cross connections, E&M/DISA trunk cartridge 282
CSU
alarms 577
clock source 505
connecting DTI to external 278
disabling internal CSU 256
line build 503

line coding 504
listing 306
performance statistics 575
stats 527, 574
turning off/on, disable trunk 503
customizing call display services 357
CWI, SL-1 network
cycle, park mode 432

D

data copied 318
Data Module 525
data modules, connecting 242
data not copied 318
data, call type 513
date and time, see AutoTime&Date
Daylight Savings Time, see daylight time
daylight time, programming 435
D-channel packet
service 87
service, see ISDN
TEIs 515
DDD, message reply enh, analog sets 440
D-Dial 345
debit machines 86
DECT
answer DN 342
default destination codes
MICS 396
default password
basic 334
system coordinator 334
system coordinator plus 333
default programming, returning to 301
defaults
basic password 416
changing 331
dialing restriction 351
DN lengths 464
filters, cold start 352
Installer password 415
line numbers 507
remote access packages 463
restrictions 351
set restrictions 354
System Coordinator password 416
System Coordinator Plus password 416
delay
by number of rings 317
camp timeout 431
dial signal type 373
DRT 433
held line reminder 434
park timeout 432
transfer callback 432
delayed ring transfer
hunt groups 423
programming 433
delayed ring transfer to prime, see also DRT
deprovisioning a line 565
descending mode 126
descending, B-channel sequence 498
desk infromation, hospitality 477
desk pswd 417
desktop conferencing 193
destination codes
conflicts 330, 367, 395, 457, 458, 459, 460
defaults for MICS 396
description 391, 395
digit absorption 398
E&M dialing plan 115
network 114
normal rte 398
numbering 114
using 92
using to make a call 405
wild card 396
wild cards 396
device
disabling 535
enabling 536
state 534
diagnostics
release reasons 476
T1 signal 574
test results, system test log 541
dial mode 362, 366
dial tone
second tone 403
dial tone, absent on external lines 597
dialed digits
CLID match 446

DID trunk 101
host delay 438
PRI trunk, matching DNs 101
dialed number identification, see DNIS number
dialing
CDP call scenarios 149
filter, E&M trunk 105
filter, remote 105
line restrictions 378
restriction filters 104
restriction for remote callers 379
UDP call scenarios 145
unified dialing plan with line pools 366
dialing opt'ns 348
dialing plan
2-way DID 125
CbC configuration 122
CDP 112
enbloc dialing 450
listing 306
network 451
prefix 454
PRI routing table 394
programming 450
public DNs 453
public network 453
shared line pools 119
transparent 112
UDP 113, 453
using E&M lines 115
using line pools 366
using public lines 114
dialing plans 112
dialing restriction
allocationed overrides 352
defaults 351
filters 378
line filter 413
line/set restriction 356
maximum length 352
maximum number 352
maximum restrictions and overrides 352
remote user 380
removing a filter 352
user filter, COS 413
wild card character 350, 396
dialing rules
interdigit timeout 454
private DN length 453
private network ID 453
dialing sequence
digit absorption, destination code 398
VSC 490
wild card 352
dialing sequence restrictions 349
dialout
programming 392
use pool 392
dialpad
entering numbers 314
installation checklist 196
password 304
programming 322, 326
programming headings 305
DID
ANI number 374
auto DN 92
auto-answer only 91
default line numbering for target lines 337
DISA DN 92, 107
DTMF
emergency transfer 285
incoming 94
line numbers 507
line setting 365
no DISA 101
PRI lines 122, 335
prime line 340
private network features 101
remote access, DISA 99
restrictions 92
simultaneous calls 337
supervisory signaling 285
target line 92
target lines 89, 91
trunk 101
trunk cartridge 232
trunk cartridge wiring 284
trunk data settings 362
trunk description 91
trunks
DID template, target lines 98
DID trunk

access codes allowed 92
no prime line 92
digit absorb, destination codes 398
digital
access lines 501
DTI wiring 278
interface, clock source 517
network loss treatment 501
T1 trunks, adding 217
digital trunk
configurations 523
Interface trunk, see DTI
direct dial
intrnl/extrnl 448
line selection 448
programming 447
direct dial digit
conflicts 330, 395, 457, 458, 465
programming, F1 440
Direct dial extension 446
direct dial set, extra-dial telephone 458
Direct Inward Dial trunks, see DID trunks
Direct Inward System Access, see DISA
directd pickup 434
direct-dial # 458
direct-dial number
programming 458
directory numbers
B1 and B2 260
changing 430
changing starting DN 329
conflicts 330
hunt groups 422
in a network 112
length 464
target line recieved number length 329
DISA
accessing
auto DN 459
auto-answer no DISA 93
auto-answer trunks 93
Called Party Number (CDN) 82
calling name information 468
conflicts 395
DID trunk 101
DISA DN 82
disconnect supervision 369
DN 459
E&M network 115
E&M trunk cartridge 232
E&M trunks 96
loop start trunks 93
PRI trunk 101
private networks 177
programming answer with DISA 370
programming on PRI 82
remote access trunks 99
remote callers 106
trunk cartridge wiring 282
using 93
using COS password 106
wiring chart 282
DISA DN
changing the COS password 103
conflicts 367, 460
DID trunk 92, 101
mapping to DID trunks 107
overriding filters 106
PRI trunk 101
private network auto-answer 101
public call 177
received number DN 464
received number length 460
using 92
Disabled by sys 534
Disabled by user 534
Disabling 534
disabling
a device 535
a module 539
disconnect OSI 369
disconnect supervision
disconnect timer 500
loop start trunks 94, 100
programming trunk mode 369
T1 trunks 90
disconnect time, hardware cards 500
display buttons 312
display cntrst 348
display unreadable, troubleshooting 592
distribution block, see distribution panel
distribution mode, hunt groups 424
distribution panel, connecting the wiring 255
DMS100
send name display 524

DMS250
send name display 524
DN hunting, see multi-line hunt
DN length
at startup 329
conflicts 465
listing 306
programming 464
DND
leaving hunt group 421
on busy 345
DNIS number
programming
trunk/line data settings 362
Winkstart 374
DNs
assign to BRI card 516
BRI loop DN 516
BRI network DNs 513
changing 430
conflicts 457, 458
defaults 455
DISA 459
entering in programming 314
hunt groups 422
ISDN 80
length 464
on loop, BRI card 516
private DN length 453
D-packet service
BRI card 514
LT loop 514
POSTA 86
POSTA for BRI 87
TEI and DN
DRT delay 433
DRT, programming 433
DTI
(T1) disconnect timer 500
B-channel sequence 498
card PRI firmware download 78
clock source 505, 517
configurations 523
connecting 255
connecting to external CSU 278
connecting to service provider 278
continuity loopback test 572
CSU line build 504
E&M network 115
framing 502
ground start trunk 90
internal CSU 503
LEDs 613
line numbers 507
loop start signaling 94
network clock settings 518
PRI 197
PRI software key 492
PRI support 83
primary reference 517
programming clock source 521
programming lines 365
secondary reference, clock source 517
selecting a PRI protocol 497
specifications 637
timing master, clock source 517
trunk 89, 232
trunk type, changing 363
wiring chart 278
DTMF
answer mode 369
dial mode 366
E&M line settings 365
on DISA 92
receivers 92, 203
dualtone multifrequency, see DTMF

E

E&M
analog, private network 95
ANI number 374
answer mode 369
answer with DISA 370
auto- manual-answer 95
dialing plan 115
DISA 96
disconnect supervised 100
disconnect timer, on card 500
DNIS number 374
for target lines 98
full auto hold 372
gain level 375
line numbers 507
line pools 364
line setting 365
line settings 365

loop start requirements 94
network requirements 115
private network answer mode 370
private network, no DISA 100
profile support 323, 324
remote access 99
remote access, private network 100
set filters 105
single trunk to line pool 366
trunk cartridge 203, 232
trunk cartridge cross connections 282
trunk cartridge wiring 282
trunk cartridge wiring chart 282
trunk data settings 362
trunks 89
incoming calls, DISA 96
trunks, outgoing calls 96
EAIC (equal access identifier code) 461
electrical
outlet, power bar, extension cord 202
specifications 636
third-wire ground 202
electrical connection 198
electrical requirements 202
emergency
transfer, DID trunk cartridge 285
emergency telephone
BRI restrictions 270
installation 291
restrictions 292
troubleshooting 594
trunk module 240
with E&M/DISA trunk cartridge 282
Enabling 534
enabling
a device 535
module or its cartridges 540
enbloc dialing
description 451
dialing plan 450
enhanced answer key 441
entering numbers 314
entering software keys 494
environmental specifications 636
equal access identifier code (EAIC) 461
equipment
installation checklist 197
installing optional equipment 297
optional auxiliary ringer installation 297
optional external paging 299
optional, external music source 298
error message, description 260
ETSI
MCID 190, 485
network call diversion 187
evening schedule 384
event messages
maintenance 555
significant 556
system restarts 560
Evt 210-YYYZ 556
Evt 211-YYYZ 556
Evt 220-3546 556
Evt 221-3546 556
Evt 222-3546 556
Evt 255 556
Evt 260-0302 556
Evt 261-0302 556
Evt 263-302 556
Evt 264-302 556
Evt 265-302 556
Evt 267 556
Evt 268-07 556
Evt 269-3546 557
Evt 299 557
Evt 327 557
Evt 328 557
Evt 329 557
Evt 330 557
Evt 336 557
Evt 373 557
Evt 400 557
Evt 407 557
Evt 408 557
Evt 412-3546 557
Evt 413-3546 557
Evt 414-3546 557
Evt 415-3546 557
Evt 416-3546 557
Evt 417-3546 557
Evt 418 557
Evt 419 557
Evt 421 557
Evt 422-3546 558
Evt 423-3546 558

Evt 441 558
Evt 442 558
Evt 453 558
Evt 454 558
Evt 458 558
Evt 459 558
Evt 680 558
Evt 681 558
Evt 683 558
Evt 687 558
Evt 688 558
Evt 689 558
Evt 690 558
Evt 691 558
Evt 692 558
Evt 693 558
Evt 694 558
Evt 695 558
Evt 696 558
Evt 697 558
Evt 698 559
Evt 822 559
Evt 882 559
Evt 883 559
Evt 992 559
EVT799-XXXX YY 559
exception (see dialing restriction)
exiting the program 313
expanded system 245
expansion cabinet
    clip ferrite bead 220
expansion cartridge
    installation error 236
    installation planning 198
    not supported 204
    numbering 261
    six-port 246
    system initialization 301
    twelve-port 247
    two-port 245
expansion equipment
    installation checklist 198
    not supported 204
expansion module
    12-port cartridge 247
    6-port cartridge 246
    connecting 253, 254
    routing fibers 254
expansion modules
    connecting 242, 253, 258
    fiber cable guide 250
    fiber comb 250
    fiber spool holder 251
    ICS door label 251
    spacer 251
    spacing 250
    wiring 255
expired alarms, hospitality 479
extended
    answer key 441
    superframe (IESF) 502
extension
    Direct dial 446
extension cord 202
extension wiring, S or T 295
external
    CSU, connecting the DTI 278
    music source, impedance 297
    paging, troubleshooting 608
    voice message telephone number 487
external access code
    conflicts 395
external call
    DNIS number
    host delay 438
    hunt group cadencing, fixed, hunt groups 423
external code, access codes 458
external equipment
    music source 298
    paging 299
external line
    access code conflicts 457, 458, 465
external lines
    auxiliary ringer 371
    line/set restrictions 104
external music source
    input levels and impedance 298
    optional equipment list 199
    programming 298
external paging
    contacts diagram 299
    external line port for talkback 299
    output and input impedance 299
    programming 299
external terminal, tandem network 136

external voice mail access, sets 358
extra-dial telephone
    direct dial set 458
    programming 387

F

featr settings 306
feature
    codes, troubleshooting 630
    hospitality services 225
    hunt groups 224
    line redirection 184
    settings programming 430
    settings, see also featr settings
    using remotely 99
feature button 309
feature button, 7316 icon 319
feature cartridge slot 234
feature cartridge slots 216
feature codes 465
Features (Restrictions)
    Link (71) 392
    Pause (78) 392
    Programmed Release (*89) 392
    Run/Stop (*9) 392
    Wait for Dial Tone (804) 392
ferrite bead 220
fiber cable management system
    fiber cable guide 250
    fiber comb 250
    fiber spool holder 251
    ICS door label 251
    spacer 251
fiber cables
    connecting 253
    fiber comb 253
    fiber spool holder 253
    guide 250
    installation 248—254
    making connections 253
    routing 254
fiber comb, description 250
fiber expansion cartridge, installation tips 235
fiber port allocation, ICS door label 251
fiber spool holder, description 251
fiber spool, using 252
fibre cable 243
file transfer 193
filter 00 351
filter 01 351
filters
    default line restrictions 379
    default remote restrictions 379
    defaults 351
    dialing sequences 349
    hospitality room settings 478
    line restrictions 378
    maximum length 352
    overrides 378
    overriding 106
    programming 349
    remote restrictions 379
    removing 352
    removing restrictions 353
    restriction 378
    schedules 354
    see also restriction service 349—354
    wild card 352
filters, see also restriction service
fixed charge dialing, see 900
fixed trunk, data settings 362
fixed, BRI sampling 515
foreign exchange (FX), CbC service 471
framing
    disable trunk cartridge 502
    extended superframe 502
    format for T1 and PRI 502
    module status, disable trunk 502
    superframe 502
    TI and PRI 502
full
    autohold programming 372
    autohold, trunk/line data 362
    hospitality 478
fwd no answer 345
fwd on busy 345
FX 390
    routing table 393
FX, INWATS, 900, nine hundred, see 900

G

gain

high 375
normal level 375
programming 375
trunk/line data settings 362
gain level
CSU line bld 503
ground start trunk 90
grounded outlet 198
groundstart
answer mode 369
line setting 365
trunk data settings 362
Group 4 fax using ISDN applications 194
group function, naming hunt groups 427

H

handsfree
programming 345
handsfree/mute, assigned 341
hardware
clock source 517
D-channe 87
disconnect timer, cards 500
installation checklist 196
interface list 306
modules 505
power software first 207
PRI, send name display 524
programming 495
programming CbC services 473
setting clock source 521
software install first 207
system initialization 301
top level 332
trunk cartridges in ICS 495
heading 311
headset 199
held line reminder
delay, programming 434
programming 433
HF answerback 345
Hold
button 309
setting SWCA controls 445
hold
full autohold, programming 372
tones, music, or silence 431
hospitality
administrative set features 225
call restrictions 478
features 225
password 416
password listing 306
room set features 225
room/desk information 477
service times 479
services programming 477
setting alarms 479
user interface 306
host delay 438
hotline 346
humidity, ICS 200
hung lines 598
hunt delay 425
hunt group
page zone 421
Hunt Groups
auxiliary ringer 427
Hunt groups
member order 423
usage metrics 583
hunt groups
adding and removing members 421
appearances 421
broadcast 424
busy tone 425
call forward override 421
delayed ring transfer 423
description of use 420
distributing hunt group calls 424
external cadencing 423
features 224, 421
hunt delay 425
hunt group DN 422
listing 306
member order 423
moving members 423
name display 468
naming the group 427
overflow 425
overflow set 426
priority calls 421
programming 422
programming options 420
queue timout 426
queue, on busy 425
ringing group 421

rotary 424
routing for busy lines 425
sequential 424
set number range 422
temporarily leaving group 421
unassigning lines 423
upgrading from ILG 224
videophones 421

I

I/F levels 501
icons on programming telephones 309
ICS
background music 430
BRI-U wiring 273, 275
cable connections 257
cable trough 300
cards 495
door lable, description 251
emergency telephone installation 291
expansion cartridge numbering 261
expansion module spacing 250
external loop start lines wiring chart 267, 268
feature cartridge slots 216
humidity 200
installation checklist 200
internal modules 260
minimum clearance 200
minimum distance 200
non-expanded numbering 261
primary reference 517
required equipment 197
slot, installation alarm 236
slots, diagram 234
spacing requirements for MICS-XC 201
ST interface card wiring 270, 271
system coordinator passwords, using 303
telephone and auxiliary equipment wiring chart 265
telephone wiring chart 264
temperature 200
troubleshooting 615
trunk cartridge slots 495
trunk module location 507
ventilation gap 200
wiring 260
identify device connected to the system 531
identifying the system 319
`Idle` 534
idle line
full autohold 372
search for 365
if busy 362, 367
ILG, upgrading to Hunt Groups 224
immediate signal type 373
impedance
external pacing equipment 299
loss package settings 372
incoming
call routing, call-by-call 498
calls, loop start trunks 93
changing the COS password 103
E&M trunk, no DISA 96
target lines 98
using DID trunks 94
incoming external lines, restricting 105
indicators
power 302
telephone buttons 310
initial configuration checklist 196
initializing the system, startup programming 327
inserting trunk and service cartridges 239
installation
cartridges 231
checklist 228
clock source loops 518
electrical requirements 202
emergency telephone 291
equipment and supplies checklist 197
expansion equipment checklist 198
expansion module spacing 250
external paging system 299
feature cartridge 237
fiber cables 248, 250
ICS and expansion modules checklist 200
ISDN terminal equipment 294—296
location requirements 200
module spacer 251

music 297
Norstar telephone 292
optional equipment checklist 199
planning checklist 196
Installer
interface list 306
password 304, 306, 327, 415
programming 332
installing
auxiliary ringer 297
modules 233
optional equipment 297
Integrated Communication System, see ICS
Integrated Voice Response Center 492
intercom
assigning buttons 341
button programming 338
prime line 341
intercom DNs, conflicts 395
intercom key
target lines 89, 97
interdigit timeout, dialing rules 454
interface levels 501
interference, minimum distance 200
internal CSU
internal numbers
changing 430
length 464
internal terminal, tandem network 137
internal user access features 110
internal wiring requirements 204
internal/external number, direct dial 448
international Inwats, CbC service 471
Internet access 194
internet access
ISDN router 86
Internet service provider (ISP) 86
invalid configurations, trunks 523
Invoke by hold, SWCA 445
Inwats, CbC service 471
ISD/TT, I/F levels 501
ISDN
applications 193—194
bearer capability 56
BRI card 65—70, 511
BRI card B-channels 512
BRI card call type 513
BRI card D-packet service 514
BRI card loop lines 511
BRI card loop types 511
BRI card loops 511
BRI card terminal equipment 83
BRI card, assign DNs 516
BRI card, DNs on loop 516
BRI card, loop DN 516
BRI card, LT loop 514
BRI card, network DNs 513
BRI card, sampling 515
BRI card, TEIs 515
BRI ICS wiring charts 269—274
BRI line, loopback test 573
BRI network interface wiring 276
BRI trunk 97
BRI trunk module wiring charts 287—289
BRI trunks
BRI, ST trunk modules 236
BRI, U2 trunk modules 236
BRI, U4 trunk modules 236
BRI-ST card 232
BRI-ST trunk modules 263
BRI-U2 card 232
BRI-U2 trunk modules 263
BRI-U4 card 232
BRI-U4 trunk modules 263
capabilities 53
clock source 517
clocking 69—70
data transmission speed 58
D-channel packet service 87, 514
default DNs 83
desktop conferencing using 193
devices 197
digital access lines (DAL) 501
DN 516
DN range 79
DN range, default 516
equipment 193—194
file transfer using 193
framing format for T1 and PRI 502
Group 4 fax using 194
hardware configuration 64—68
I/F levels 501
installation programming 76
integrated X.25 PAD 87
Internet access using 194
jack and plug pin numbering 277

LAN access using 194
LAN to LAN bridging using 194
layers 55
leased line backup using 194
Loop DN, see also ISDN DN 84
loop termination 240
module port numbering 260
network DNs 513
network loop programming 87
network synchronization 69—70
OLI #, programming 343
ordering 73
planning service order 55
PRI configurations 523
PRI line setting 365
PRI trunks 89, 97
primary reference, clock source 517
profile 323, 324
profile support 323
programing PRI lines 81
programming BRI lines 81
programming BRI resources 78
programming clock source for DTI and PRI 521
programming sequence 77
router 86
S interface 67
S loop programming 83
S loop, wiring requirements 204
S or T loop, additional power 295
S or T loop, wiring 295
S reference point 67
secondary reference, clock source 517
see also Integrated Services Digital Network
service provider protocol 76
services and features 58
set DNs 80
software key 492
SPID 84
SPID, assigning to T and NT loops 512
standards 71
T network wiring 276
T reference point 68
telecommuting using 193
terminal equipment configuration 66—67
testing network connection 230
timing master 517
total DNs per system 84
U interface 66
U-LT loop programming 83
U-LT reference point 66
U-NT network wiring 277
U-NT reference point 66
videoconferencing and video telephony using 193
wiring charts 269—277
wiring requirements 204
ISDN call connection limitation (ICCL), MCDN 61, 128, 154, 648
ISDN loss plan 502
ISDN, NIUF, see Bellcore/National ISDN Users Forum 75

J

jack
pin numbering 277
U-LT pin-out 296
wiring for terminal 294

K

KSU cards, Hardware setting 495

L

LAN
access using ISDN applications 194
router 194
to LAN bridging ISDN applications 194
languages
display 348
profile 1 323
profile 2 323
profile 3 324
profile 4 324
last dialed digits 100
leased line backup using ISDN applications 194
least-cost routing

creating routing over private network 406
leaving the program 313
LEDs
DTI 612
power indicators 302
lightning protectors 205
line
assign prime set 368
assignment 336
BRI, about 97
capacity of trunk cartridges 203
default line restrictions 379
deprovisioning 565
filters 104
held reminder programming 433
liine pool types 364
loopback test 567
number range 507
pool
in a dialing plan 112
troubleshooting 631
profile, reviewing programming 319
programming alarmsset 439
programming ANI number
programming answer keys 441
programming answer mode 369
programming answer with DISA 370
programming auto privacy 368
programming auxiliary ringer 371
programming CAP assignment 449
programming dial mode 366
programming dialing plan 450
programming direct dial 447
programming DNIS number
programming DTI 365
programming full autohold 372
programming gain 375
programming host delay 438
programming if busy 367
programming line restrns 378
programming link signal (link at CO) 371
programming link time 438
programming loss package 372
programming message reply enh 440
programming name 377
programming received number 367
programming remote restrns 379
programming restrictions 378
programming restrn filters 378
programming set relocation 439
programming signal type 373
programming system telco features 380
programming trunk mode 369
programming trunk type 363
programming voice msg center 380
programming, viewing the settings 320
provisioning 565
public, private to, pool 364
redirection feature 184
restriction 104
ringing service, auxiliary ringer 372
search for idle 366
selecting first line 340
target line ring 367
troubleshooting 596—605
trunk/line data, copying 363
type 364
viewing assigned lines 338
voice message routing 487
line access
listing 306
programming CbC services 473
programming for sets 335
line build, CSU 503
line buttons
loop start 94
maximum 338
no buttons 338
line coding 504
line feature, auto privacy 368
line filter 413
line keys, limits 337
line numbers 314, 507
line pool
access code 455, 463
access code coordination 120
access codes 365
assign 364
E&M trunk for ring again 366
limit to outgoing 364
loop start 94
PRI trunks 89, 97

prime line 340
programming line access 365
target lines 366
types 364
line pool access code 92
auto DN 92
conflicts 367, 457, 458, 459, 460, 465
programming 339
with DISA 92
line pool codes
conflicts 330, 395
line pools
dialing plan for shared pools 119
PRI 339
programming 474
programming tip 344
line redirection, calling name information 468
line restrictions
defaults 379
programming 378
remote access 92
line selection, for a direct-dial telephone 448
line settings, ringing 387
line supervision, disconnect timer, on card 500
line type
programming pool for prime line 341
trunk/line data settings 362
line/set
filters 104
line/set restriction
filters 104
maximum 356
user filter 413
lines
assigning, hunt groups 423
BRI card 511
call log set 358
dialing filters 105
external codes 458
line button 81
listing 306
remote access package 462
send name display, PRI 524
setting auxiliary ring 297
single SPID 81
SWCA keys 442
top-level 331
trunk type data settings 362
trunk/line data programming 361
link
blocking use of 355
F71 371
outgoing restrictions 371
programming link at CO 371
link at CO 362
link signal, dialout 392
Link status 527
link status, user interface 306
link time 438
local calling, setting up route 399
location
private access codes 113
UDP code 453
UDP private DN length 113
location requirements
installation planning 200
log
network evt 546
system administration 544
system test 541
log space
number of spaces 360
programming 360
logging calls
MCID 190, 485
long distance
adding an access code 404
carrier code 142
setting up route 401
long telephone numbers 314
longCO 373
longPBX 373
loop
BRI card 511
BRI card, DNs on loop 516
line numbers 507
network programming 87
view card 496
loop DN
BRI card 84, 516
loop performance 295
loop start
answer mode 369

answer with DISA 370
as prime line 94
configuring 203
data settings 362
disconnect supervision 100, 369
E&M requirements 94
emergency telephone 291
for target lines 98
full autohold 372
line pools 364
line setting 365
loop start signalling 94
loss package settings 373
MICS-XC compatibility 95
no set lines 336
ONN blocking 491
outgoing 94
providing direct dialing capability 94
remote access 99
remote access, public network 100
trunk 93, 232
trunk cartridge wiring chart 280
trunks 89
wiring 204
wiring chart 267, 268
loop start signalling, supporting trunk cartridges 94
loop start trunk
auto-answer 93
incoming calls 93
loop supervision, see disconnect supervision
loop termination
ISDN terminal 240
shorting straps 241
loop type, BRI card 511
loopback test
BRI lines 573
initiated by the central office 570
initiated from Norstar 570
starting 571
loops
no bridge taps 204
profile support 323
S or T extension wiring 295
loss level 502
loss package
descriptions 373
programming 372
trunk/line setting 362
loss/gain settings 372
lowest, park mode 432
Lp, BRI LT loop 514
LT loop
BRI card 514
D-packet service 514
lunch schedule 384

M

M1, see Meridian
M7100 telephone, accessing external lines 458
M7324
CAP assignments 449
maintenance 306
alarm codes 548
beginning a session 528
bipolar violations 578
carrier failure alarms 577
CSU stats 574
current alarm 542
device version number 533
disabling module/cartridges 539
enabling the module/cartridges 540
event messages 555
identify device connected to system 531
module 537
network event log 546
port/DN status 530
provisioning 563
short term alarms 578
state
of a cartridge 539
of a module 538
of device 534
system
administration log 544
test log 541
system administration log 544
system version 529
top level 332
making a call using destination codes 405
Malicious call identification (MCID)
programming 190, 485
manual answer

E&M trunks 95
line appearances 96
loop start trunk 93
map table, call by call routing 499
maxi system
module ports 245
trunk module location 507
maximum incoming calls, CbC limits 474
maximum line buttons 338
maximum outgoing calls, CbC programming 474
MCDN
APN network features 128
break-in 164
camp-on feature 162
ISDN call connection limitation (ICCL) 61, 128, 154, 648
Meridian configurations 143
message waiting indication (MWI) 161
network call redirection information (NCRI) 152
network features 160
see also PRI and APN
software code 127
software key 492
trunk anti-tromboning (TAT) 61, 128, 158
trunk route optimization (TRO) 156
medium, hospitality 478
mediumCO 373
mega system 245
member DNs 422
member order, hunt groups 423
memory button
loop start 94
Meridian
advanced private networking 138, 144
MCDN 143
networking 107
networking with SL-1
SL-1 network 143
message
reply enh programming 440
waiting indicator, see also MWI 358
message waiting indication
MCDN 161
messages
network features 160
MICS
basic password 307
behind a PBX 111
default destination codes 396
default DID line numbering 337
electrical connection 198
ISDN DNs 84
maximum 8 modules 495
mounting the modules 233
NVRAM cartridge 210
planning checklist 196
power the system 300
power, PS1, PS2, PS3 295
private network caller features 111
private network tandem calling (PNTC) 129
remote access caller features 110
software keys 492
station module 505
system coordinator password 307
system functionality 45
system internal caller features 110
system overview 206
trunk modules 507
upgrading to MICS-XC 214
MICS-XC
basic password 307
connecting expansion modules 258
default DID line numbering 337
fiber connections 253
interface headings 306
loop start trunk compatibility 95
maximum 14 modules 495
mounting the modules 233
powering the system 300
software keys 492
station module 505
system coordinator password 307
system functionality 45
system overview 206
trunk modules 507
upgrading from MICS 214
US systems, upgrading, UTAM 208
MICS-XC, see also ICS
midi system
module ports 245
trunk module location 507

minimum clearance 200
minimum incoming calls, CbC limits 474
minimum outgoing calls, CbC
programming 474
model 348
modify, NRU 391
Modular 8X24 KSU, replace with 0X32
ICS 209
Module status 527
module status
enabling/disabling cartridges 507
listing 306
modules
ASM features 506
brackets 233
BRI B-channels 512
BRI call type 513
BRI card, assign DNs 516
BRI card, DNs on loop 516
BRI card, D-packet service 514
BRI card, loop DN 516
BRI card, sampling 515
BRI loop lines 511
BRI loop types 511
BRI loops 511
BRI LT loop 514
BRI network DNs 513
BRI TEIs 515
check number of trunk cartridges 538
checking the state 538
connecting 259
connecting multiple modules 244
Data Module 525
enabling 540
fiber cable guide 250
fiber spool holder 251
hardware 505
ICS and feature cartridge slots 234
ICS door label 251
mounting 233
non-expanded numbering 261
numbering 261—262
port DNs 260
port numbers 260
power LEDs 302
show system modules 495
showing inventory 537
spacer 251
Station Module 505
troubleshooting 615—634
Trunk Module 507
verifying ports 506
verifying status of analog module 506
wiring 255
wiring charts 260
monitor
turning tone on/off 446
monitoring
call usage set 90
incoming call usage 336
mounting bracket 234
moving telephones 293
moving telephones, also see set relocation
multi-line
hunt 58
hunt groups
ordering 75
multiple modules 244
multiple target lines, broadcast ring 336
music
adjust volume of external source 298
background music 430
installation 297
on hold 431
source 298
MWI, assigning to a line 358

N

name
programming for lines 377
terminals&sets 306, 348
trunk/line data 306
name display, ANI number 374
National ISDN standards 71
national length, profile 2 466
network
access, CbC services 471
APN features 128
APN, see also MCDN 138, 144
behind PBX 111
caller information on SL-1 128
calls within network 181
CDP call routing 149

clock source settings 518
configuration samples 176—191
configurations 109—149
controlling access 103
COS 103
destination code number 114
E&M dialing plan 115
event log 546
external termination, tandem network 136
internal termination, tandem network 137
line pool access codes 120
line pool access, set 120
log, check items 547
node 100
options 110
private access codes 113
private DN length 113
private systems to Norstar system 111
private, call scenarios 180
public network to Norstar system 110
restriction filter 104
SL-1 features 127
tandem 119
tandem network 129
target line 100
test BRI network connection 230
transparent dialing plan 112
troubleshooting 621—634
user problems 621
using destination codes 114
using E&M trunks 183
using SL-1 127
Network Call Diversion 63, 186, 482, 650
Network call diversion (NCD)
programming 187
network call redirection information (NCRI), MCDN 152
network calls
creating autodial 121
external calls 121
Network DN
BRI card 513
network DN 78
call type 513
incoming calls 81
received number 367
single SPID 81
Network evt log 527
network evt log 306
network loop programming 87
network name display
calling party name 467
connected name, receiving and sending 468
hunt group 468
interactions 468
OLI# 467
other programming, OLI#, Called ID, CLID set 469
private/unknown names 467
programming 469
programming BusName 466
protocols, supported 467
network services
listing 306
network specific facilities, see NSF
networking
MCDN features 160
MCDN, break-in 164
MCDN, camp-on feature 162
MCDN, ISDN call connection limitation (ICCL) 61, 128, 154, 648
MCDN, message waiting indication (MWI) 161
MCDN, network call redirection (NCRI) 152
MCDN, trunk anti-tromboning (TAT) 61, 128, 158
MCDN, trunk route optimization (TRO) 156
next 311
NI
send name display 524
NI-2, protocol 497
night ringing service schedule 386
night schedule 384
night service 385
nine hundred, see 900
NIUF, see Bellcore, National ISDN Users Forum
No free lines 604
node 100

Non Volatile Read-only Memory, see NVRAM
non-expanded system (ICS alone)
numbering 261
normal rte, destination codes 398
normal service
line restrictions 378
remote restrictions 379
Norstar
as off-premise extension 111
sets 197
starting the system 300
telephones 197
Norstar Remote Utilities, see NRU 391
Nortel Customer Response Center 493
Not available 534, 602
Not in service 602
notify set, hospiality 479
NSF
extensions 497
NI-2 protocol, with CbC services 497
NT1 230, 276
stand alone connections 70
numbering, trunk module lines 223
numbers, entering 314
NVRAM cartridge
installation diagram 237
limitations 210
required equipment 197

O

occupancy, room 478
OLI
send name display, PRI 524
OLI#
name display 467
network name display programming 469
PRI, call display 344
programming 343
on hold 431
ONN blocking 470
[©] 819, ONN blocking 488
[©] 819 470
listing 306
loop start on BRI card 491
on BRI 490
programming 470, 488
setting up modules 490
suppression bit 490
tone 470
VSC 489
open switch interval
(OSI), description 369
disconnect timer 500
optional equipment
auxiliary ringer 297
auxiliary ringer, programming 371
external music source 298
external paging 299
installation 199
installation checklist 204
installing 297
troubleshooting 606—608
optional features
programming alarm set 439
programming answer keys 441
programming AutoTime&Date 435
programming background music 430
programming call log 436
programming call log space 437
programming camp timeout 431
programming CAP assignments 449
programming daylight time 435
programming dialing plan 450
programming direct dial 447
programming directed pickup 434
programming DRT 433
programming DRT delay 433
programming held line remind delay 434
programming held reminder 433
programming host delay 438
programming link time 438
programming message reply enh 440
programming on hold 431
programming page timeout 435
programming page tone 434
programming park mode 432
programming park timeout 432
programming receiver volume 431
programming set relocation 439

programming transfer callback 432
OPX 292
OSI (open switch interval) 369
outgoing
calls, routing table 393
E&M trunks 96
external routing codes 122
host delay 438
PRI lines 122
restriction filters 104
using loop start 94
outgoing name and number block, see ONN blocking
Outwats
carrier access codes 393
CbC service 471
routing 390
routing table 393
overflow
Hunt group 224
in queue 425
routing, schedules 409
overflow set, hunt groups 426
overlay
button definitions 311
positioning on the set 310
overrides
maximum
restriction filters 104, 378

P

packet service 87
page timeout 435
page tone 434
page zone
Capabilities 345
hunt group 421
paging
Capabilities 345
equipment connections 299
external output and input impedance 299
park mode 432
park prefix
access codes 457
conflicts 330, 457, 458, 465
park timeout 432
pass codes, see software keys
passive bus 295
password
admin 307
basic 304, 307, 416
call log programming 414
calls answered with DISA 459
cond pswd 417
COS 92
COS user filter 413
desk pswd 417
dialpad 304
Hospitality password 416
Installer 304, 306, 327, 415
profile 304
System Coordinator 304, 307, 416
System Coordinator Plus 306, 416
System Coordinator plus 333
system coordinator Plus 304
user 307
password keys, see software keys
passwords
COS, using DISA 106
interface list 306
programming 303, 304, 412
programming passwords 415
top level 331
Pause (F78) 392
payload loopback test 567
PBX, using Norstar 111
phantom circuits 295
phantom DN 441
physical trunks 336
pickup grp 345
pin number, ISDN jack 277
planning checklist, installation 196
plug pin numbering 277
PNTC
external termination 136
internal termination 137
networking features 127
using SL-1
point-of-sale terminal adapter, see POSTA
point-of-sale terminals 86
port numbering 260
port numbers 260
port, verifying module ports 506
Port/DN status 527
port/DN status 306, 530

positioning the overlays 310
POSTA
    BRI 87
    Bri cards, D-packet service 86
power
    LEDs 301
    losing call log information 302
    S or T loops 295
    specifications 635
    system indicators 302
    warm start 301
power bar 202, 300
power cords 202
powering the system
    process 300
    service cable connections 300
prefix
    conflicts 465
    public network, dialing plan 454
PRI
    B channel sequence 498
    BusName, network name display 466
    Call-by-call services over network 121
    card download 78
    carrier failure, standard 501
    CbC destination codes 390
    CbC limits 474
    CbC service selection 471
    CbC trunk allocation 122
    choosing lines for call 337
    CO fail 501
    configurations 523
    configuring CbC 122
    connecting to service provider 278
    connecting wiring 258
    dialing plan, 2-way DID 125
    dialing with intercom 337
    DTI 197
    framing 502
    invalid digital trunk configurations 523
    invalid mixed trunk configurations 523
    ISD/TT 502
    line appearances 337
    line numbers 507
    line pools 339
    line restriction rules 349
    line setting 365
    Meridian 1 networking (MCDN) 138, 144
    Meridian M1 network configuration 143
    network name display 467
    networking 142
    networking using SL-1 127
    no DISA on trunk 101
    no prime line 340
    OLI # 344
    profile support 323, 324
    programming call limits 475
    programming CbC services 473
    programming clock source 521
    programming DISA 82
    programming line pools 474
    programming lines 81, 335
    programming routing table 394
    remote access trunk 101
    remote access, DISA 99
    second dial tone 403
    selecting a protocol 497
    send name display 524
    service types routing table 393
    SL-1 networking features 127
    SL-1 tandem network 129
    software code 127
    software key 492
    suppression bit 490
    target line, if busy 367
    through-fed repeaters 256
    trunk 89, 97
    trunk data settings 362
    valid digital trunk configurations 523
    valid mixed trunk configurations 523
    view card 496
PRI channel
    disabling 565
PRI channel, disabling 565
PRI line
    provisioning 564
PRI line, provisioning 564
PRI-A 339
PRI-B 339
Primary Rate Interface trunk, see PRI

primary reference, clock source 517
prime line
assign line pool 365
describing 340
DID 340
exception 92
external line assignment 340
intercom 341
line pool 340
no PRI 340
prime telephone 340
programming as intercom 366
programming line type pool 341
target line 340
prime set
assign DN 368
auto-answer calls 368
DRT 433
prime line 340
received number 367
trunk type data 362
priority call 346
priority, hunt group 421
PrivAccCode 460
privacy, programming auto privacy 368
private
CbC service 472
PRI protocol 497
routing table 393
private access codes
conflicts 460
network 460
UDP 113
private DN length
dialing rules 453
networking 113
Private DN, CbC over Tie 122
private line 364
private name 467
private network
additional configuration 142
auto-answer, DISA DN, Auto DN 101
call routing codes 138
CDP call routing 149
dialing plan 451
DID trunks 101
DISA 106
E&M no DISA 100
E&M trunk answer mode 370
E&M trunks 89
MCDN break-in 164
MCDN camp-on feature 162
MCDN ISDN call connection limitation (ICCL) 61, 128, 154, 648
MCDN message waiting indication (MWI) 161
MCDN network call redirection information (NCRI) 152
MCDN software key 492
MCDN trunk anti-tromboning (TAT) 61, 128, 158
MCDN trunk route optimization (TRO) 156
PNTC call routing 133
private access code 460
private access codes 113
private network ID 453
PSTN calls 142
Public DN, CDP 112
public DNs 142
remote access 100
sample configurations 180—183
SL-1, private network tandem calling (PNTC) 129
tie lines 177
UDP 453
using E&M trunks 183
private network tandem calling, see PNTC
private networking (APN), see also MCDN 138, 144
private number 359
private numbering plan, CbC dialing 122
profile
changing 325
installation checklist 196
password description 304
profile 1, North America 323
profile 2 323
profile 3 324
profile 4 324
programming 322
programming headings 305
trunk cards, profile 1 323
trunk cards, profile 2 323
trunk cards, profile 3 324

trunk cards, profile 4 324
profile 1, languages 323
profile 2, languages 323
profile 3, languages 324
profile 4, languages 324
programmed release, dialout 392
programming
1st display 359
access 304
access codes 455
allow last number redial 355
allow link 355
allow saved number redial 355
analog and BRI ONN 470
analog VSC 489
ANI number
answer mode 369
answer with DISA 370
auto DN 459
auto privacy 368
auxiliary ringer 297, 371, 388
basic admin password 307
basic password 304, 416
BRI card 511—516
BRI lines 81
BRI resources 78
business name 469
BusName 466
busy lines, hunt groups 425
button definitions 311
call log password 414
call restrictions, hospitality 478
called ID 359
CAP assignment 449
capabilities 345
clock source for DTI and PRI 521
control telephone 382
copy trunk/liine data 363
copying telephone programming 316
COS line filter 413
COS password 412
day-to-day changes 334
dial mode 366
dialpad 304
dialpad headings 305
dialpad, CCITT 326
display buttons 312
DN length 464
DNIS number
enable/disable trunk cartridge 504
entering 333
exiting 313
external code 458
external music source 298
extra-dial telephone 387
feature settings 430
full autohold 372
gain for E&M line 375
handsfree/mute 341
hardware 495—525
hospitality cond password 417
hospitality desk password 417
hospitality password 416
hospitality services 477
hunt delay 425
hunt group function name 427
hunt groups 422
if busy 367
indicators, telephone programming buttons 310
insaller 332
installer password 304, 415
ISDN 77
ISDN PRI lines 81
least cost routing 406
line access 335
line keys, limits 337
line name 377
line pools 364
line pools for CbC 474
line restrictions 378
line type 364
lines 361—380
lines to DTI 365
link at CO 371
log space 360
loss package 372
maintenance 527—579
ONN 470
overflow
defining set, hunt groups 426
overlay 309
passwords 303, 304, 412—418
PRI routing table 394
prime set 368
profile headings 305
programming overview 304

programming telephones 309
received number 367
release reasons 476
remote access 462
remote restrictions 379
restriction service 389
restrictions 378
reviewing lines 319
reviewing sets 319
ring delays 317
ringing groups 387
ringing service 385
routing 113
routing requirements 391
routing service 389
schedule names 383
schedule times 383
services 381—385
set lock 355
set name 469
signal type 373
software keys 492
special characters 312
startup 327—329
startup headings 305
system 303—319, 420—465
system coordinator 333
system coordinator password 304, 307, 416
system coordinator plus password 304, 416
system features 380
    remote restrictions 379
    restriction service 349—356
system speed dial 411
telco features 357, 380, 487
telco features (system-wide) 380
Terminals&Sets 335—360
Time&Date 419
timing for startup 327
tools 309
top-level 331
trunk answer 385, 386
trunk mode 369
trunk type 363
trunks and lines 361
user preferences 315
viewing assigned lines 338
viewing line 320
    viewing updates 314
    VMsg center, on lines 380
    VSC for BRI 489
programming record
    about the overlays 309
    description 313
    planning the routing service 390
    routing service 393
programming system features
    Caller ID set 357
progrming pswds 306
protocol
    selecting 497
    service provider 76
    supporting call by call services 471
Provisioning 527
provisioning
    DTI card 496
    listing 306
    T1 lines 564
PS1, power 295
PS2, power 295
PS3, power 295
PST
    adapter, RS-232 interface 88
    network loop programming 87
PSTN
    analog access lines 501
    external routing code 122
    I/F levels 501
    on a network 128
PSU LEDS 301
Pswd, see password
public
    CbC service 471
    PRI protocol 497
    routing table 393
public calls, Auto DN 179
Public DN
    dialing plan 453
    external routing code 122
    private network 142
    public network call scenarios 176
    public networks, CDP 112
    using with CDP 112
Public DN length, private networking 142
public line 364
public network
    call descriptions 176—184

carrier codes 142
dialing plan 451, 453
DID trunk
DISA 106
loop start trunks 89
PNTC routing 130
using DID 179
pulse signalling 366

Q

Q, dialpad 304, 326
queue 425
queue timeout, hunt groups 426
queues, Hunt groups 224

R

reallocating log space 437
Rec'd # length 464
Rec'd # length, listing 306
receive objective loudness rating (ROLR) 502
receive, setting gain 375
received number
conflicts 367
target lines 367
trunk/line data 362
received number length
DISA DN 460
programming 464
receiver volume 431
receiver, see also handset
receiving
calling name 467
connected name 467
redirected name 467
receiving calling name 467
redirection
line redirection 184
ring 346
re-entering software keys 492
reg. pswrd 306
region 305
Release button
icons 309
release button 313
release reasons
listing 306
programming 476
relocating
CAP module 450
telephones 293
remind delay 434
remort access packages
COS 462
remote access
caller features 110
COS password 412
default restrictions 379
defaults 463
DID trunks 101
DISA 82
DISA DN, programming 459
E&M trunks 100
filters 105
line packages 462
line restrictions 379
listing 306
loop start trunks 93, 100
PRI trunk 101
private network 100
programming 462
public network 100
remote pkg 414
restricting 462
restricting outgoing calls 105
restrictions 94
setting link time 438
system access 99—101
through network 110
trunk types 99
users, troubleshooting 621—634
using Call by Call programming
remote access packages
copy 463
remote feature code 92
remote feature request 100
remote filters 92
remote line access
remote packages 462
remote line access, programming 462
remote packages 92
programming 414
remote line access 462
remote restrictions
default filters 379
filters 413
process chart 105

programming 379
replacing a telephone
of different types 593
of same type 593
status 594
required equipment 197
reset logs 437
reset memory 305, 328
restore, NRU 391
restricting
line at telephone 356, 378
remote access 462
remote callers 379
telephones 349
restriction
default 351—354
filters 378
service 349, 378—380
line/set 356
restriction dialing, setting up routes 410
restriction filters
assign to sets 354
auto-answer 100
call routing 120
COS 103
default line restrictions 379
network 104
overrides 104
remote restrictions 379
removing filters 353
restriction service 378
restrictions
911 351
default filters 351
hospitality services 478
lines 306
link signal 371
programming 378, 389
programming for terminals and sets 349
removing filters 352
schedules 104
see also Terminals&Sets and Lines 389
set restrictons 354
terminals&sets 306
Restrn service, list 306
retrieving
calls, park prefix 457
voice messages 487
retry intrvl 479
reusing trunk and station modules 217
reviewing line programming 319
reviewing set programming 319
ring again, assign E&M trunk to line pool 366
ring delay, programming 317
ring only 167, 172, 336, 421
ring transfer, hunt groups 423
ring type 348
ring/call distribution, Hunt group 224
ringer, auxiliary ringer 371
ringing
broadcast, hunt groups 424
hunt delay 425
rotary, hunt groups 424
sequential, hunt groups 424
target line 367
ringing group
hunt group 421
programming 387
ringing service 385
schedules 388
ringing service
auxiliary ringer 372
list 306
night schedule 386
ring group assignment 386
ringing groups 385
RJ-21
DID wiring 284
RJ2HX/CA2HA distribution block
cross connections 282
ROM software cartridge 197, 237
room # 477
room condition 225
room occupancy 225, 478
room vacancy 478
room/desk information, hospitality 477
rotary 224, 424
route numbers 391
router, ISDN 86
routing
adding a long distance access code 404
carrier code 142
carrier codes 461
CDP 149

destination codes 391
dialing restrictions 410
dialout 392
for least cost routing 406
for long distance calling 401
hunt group 224
incoming DID calls 123
normal route 398
overflow 409
programming 113
programming CbC services 474
programming requirements 391
sample for local calling 399
sample for long distance calling 401
second dial tone 403
setting up leading digits 114
tandem networks 136
routing service
list 306
planning 390
programming 389
routing table
CbC service 393
checking internal dialing 389
PRI dialing plan 394
using SID 393
voice message routing, telco features 487
Run/Stop, dialout 392

S

S interface, ISDN 67
S loop
power 295
sampling 515
S or T reference point 67, 68
S reference point 67
sample configurations, private network 180
sampling
BRI card 515
S loop 515
SAPS
optional equipment list
wiring loops 204
Sched 4 384
Sched 5 384
Sched 6 384
schedules
activating services 381
assigning filters 354
control sets 383
controls 386
default line restrictions 379
default names 383
default remote restrictions 379
default times 384
night ringing service 386
overflow routing 409
remote restrictions 379
restriction service 104
ringing groups 388
SDS
second dial tone 403
secondary reference
clock source 517
security
COS 103
dialing filters 104
selective line redirection (SLR) 468
self-test, system initialization 301
send name display, PRI 524
sendiing calling party name 467
sending calling name 467
sending connected name 467
sequential 424
sequential mode 224
service
schedule control 386
service cartridge
installation tips 235
installing 239
service ID (SID)
service identifier, see SID
service profile identifier, see ISDN and SPID
service provider
connecting T1 and PRI 278
connecting to external CSU 278
ISDN protocol 76
service time
hospitality 479
service tone cadences 635
service types 82
CbC limits 474
routing table 393
using SID 393

Services
second dial tone 403
services
activatiing from control set 381
assigning direct dial numbers 458
call ringing, dialing restrictions, call routing 381
cartridge, IVD services card 197
CbC selection for PRI 471
control set 382
control sets 382
evening 384
example of alternate call ringing 381
line restrictions 378
list 306
lunch 384
night 384
programming CbC services 473
programming common settings 411
programming restrn services 389
programming ringing groups 385
programming ringing sets 387
programming routing service 389
ringing service 385
ringing, auxiliary 372
Sched 4 384
Sched 5 384
Sched 6 384
schedule names 383
schedule times 383
start and stop times 383
top level 331
turning on separately 381
services card, clock source 518
set
feature and number restrictions 354
filters, description 104
filters, E&M trunks 105
logging all calls 436
profile, reviewing programming 319
user restrictions 104
set interface, programming 303
set lock 355
set name
BusName 466
network name display 469
programming 469
set relocation
deactivate 439
programming 439
relocation enabled 293
tips 293
set restriction
default 354
filters 105
lines 92
Link 355
sets
assigning target lines 336
basic password for programming 304
OLI as called # 343
programming, system coordinator password 304
setting auxiliary ring 297
viewing telephone programming 320
shared line pools, dialing plan 119
shedule names 383
shortCO 373
shorting straps 241
shortPBX 373
show 311
show group 422
show module 495, 496
show set 167, 169, 172, 173, 335, 477
SID
routing table 393
side circuits 295
signal
programming type 373
trunk/line data settings 362
signal is immediate 366
significant event messages 556
silent monitor
turning tone on/off 446
silent, on Hold 431
simultaneous calls 337
single-line telephone
emergency phone 291
off-site 292
six-port expansion cartridge 246
SL-1
MCDN software key 492
network 138, 144
network caller information 128
networking features 127

private network tandem calling 129
private PRI protocol 497
send name display 524
software code 127
SL-1 networking 127
slots on ICS 216
SLR, see selective line redirection
softkeys, see display buttons
software
DNIS for third-party 374
NVRAM installation 237
software key
ISDN 492
software keys
entering 494
programming 492
re-entering 492
system ID 493
top level 331
user interface 306
softwarey keys
MCDN 492
space allocation, call log space 437
spacer, description 251
spacing requirements, ICS 201
special characters on display 312
specifications
CSU 637
DTI 637
electrical 636
environmental 636
power 635
service tone cadences 635
telephone loop 635
SPID
assigning to BRI 512
B channels 81
creating terminal SPID 84
defining lines 336
OLI# 344
programming ISDN terminals 80
T/NT loops, assigned 512
SrvcCode for VSC 490
ST line numbers 507
standard time, see daylight time
start and stop times, services 383
start DN
changing at startup 329
Startup 305
starting the system 300
startup 263
changing start DN 329
default filters 352
dialpad password 304
DN length settings 465
installer password 304
profile password 304
programming 327
programming headings 305
run Profile and Dialpad first 322
timing for startup 327
Startup code, installation checklist 196
startup programming 301
state of device, check 534
static DID 126
station auxillary power supply, see SAPS
Station Module 505
station module
connecting 242
fiber comb 250
installation planning 203
port numbers 260
power 301
troubleshooting 620
wiring chart 279
status, analog module 506
super 369
superframe (SF) 502
supervisory signaling, DID 285
supported upgrades 208
suppression bit 490
PRI 490
SuprsBit, ONN blocking 490
suttered dial tone 92
SWCA
defining appearance keys 442
setting controls 445
switched digital
CbC service 472
routing table 393
switches
matching signal types 373
switches, NSF extensions 497
Sys admin log 527
sys admin log 306
sys speed dial 306, 331
Sys test log 527
sys test log 306

SysID 306
sysID 493
system
  administration log 544
  basic password 304
  coordinator password 304
  coordinator plus password 304
  network configurations 109—149
  processor software 529
  programming, see also system prgrming 303—319
  restarts, event messages 560
  sample configurations 176—191
  test log 541, 555, 561
system admin, basic programming 307
system configuration checklist 197
system coordinator
  changing the password 416
  common changes 334
  extra programming 333
  passwords 303
  programming 307
  programming overlay 333
  system programming 333
system coordinator plus
  interface headings 306
  password description 304
  programming the password 416
system features, telco features, programming 380
system ID
  access 493
  finding 319
  software keys 493
system initialization self-test 301
system modules, view 495
system overview 206
system power, clock source loops 518
system prgrming
  access codes 455
  alarmset 439
  answer key 441
  auto DN 459
  autotime&Date 435
  backgrnd music 430
  call log 436
  call log space 437
  camp timeout 431
  CAP assignment 449
  daylight time 435
  delayed ring transfer to prime(DRT) 433
  dialing plan 450
  direct-dial 447
  directed pickup 434
  DN length 464
  DRT delay 433
  featr settings 430
  held reminder 433
  hospitality services 477
  message reply enh 440
  on hold 431
  page timeout 435
  page tone 434
  park mode 432
  park timeout 432
  programming CbC limits 475
  receiver volume 431
  release reasons 476
  remind delay 434
  remote access 462
  set relocation 439
  telco features 487
  top level 331
  transfer call back 432
  user interface 306
system prgrmng
  BusName 466
  programming CbC services 473
system profile
  choosing 322
system profile startup 322
System programming
  ETSI programming 187, 190, 485
system programming
  hunt groups 422
  see also system prgrming
  setting SWCA controls 445
  SWCA keys 442
system settings
  Answer key 441
  Automatic Time and Date 435
  Direct dial extension 446
  host delay 438
  link time 438
system speed dial 411
system startup
  timing for programming 327

warm start 301
System version 527
system version
finding 529
listing 306
system-wide call appearances, see SWCA

T

T loop, power 295
T network, wiring 276
T reference point 68
T/NT loops
BRI lines 511
T1
adding digital trunks 217
answer mode 369
carrier failure standard 501
connecting to service provider 278
disconnect supervision 90
disconnect timer on card 500
ground start trunk mode 90
internal CSU
invalid mixed trunk configurations 523
invalid trunk configurations 523
line coding 504
line setting 365
profile support 323, 324
setting clock source 522
setting up CbC 122
signal diagnostics 574
through-fed repeaters 256
transmission performance 574
trunk data settings 362
valid mixed trunk configurations 523
valid trunk configurations 523
talk-back paging, external line port 299
tandem network
call routing 136
shared line pools 119
target line DN
DID trunk 101
PRI trunk 101
target line number 92
target line receive digit length 82
target lines
assigning to set 336
defauld DID numbering 337
DID 89, 91
DID template 98
DID trunk 92
E&M network 115
if busy 367
incoming calls 98
incoming only 89
line pool 366
loop start and E&M 98
multiple, broadcast ring 336
no prime line 340
numbering 89, 98
received number 367
received number length 464
simultaneous calls 337
trunk data settings 362
TE, see ISDN terminal equipment
TEI
BRI card 515
default range
D-packet service
Tel #
voice message center 488
telco features
copy 357
lines 306
programming 487
programming for lines and sets 357
programming system features 380
terminals&sets 306
top level 331
voice message routing 487
telecommuting using ISDN applications 193
telephone
copy programming 316—319
emergency 291
emergency, single-line 291
Feature button 309
Hold button 309
installing Norstar sets 292
loop specifications 635
Release button 309
troubleshooting 591—595
voice message waiting indication 358
volume control 309

telephone loud ring amplifier 199
telephones
answer keys 441
assign prime set 368
basic password 304
button icons 309
call blocking (819) 470
CAP assignments 449
changing numbers 430
control sets 382
directed pickup 434
DRT on prime sets 433
equipment list 197
external access code 458
maintaining programming 293
manual-answer E&M trunks 96
maximum line buttons 338
message reply enh, programming 440
moving 293
moving tips 293
page timeout 434, 435
prime line 340
programming 309
programming an alarm set 439
programming call log 436
programming call log space 437
programming direct dial 447
programming display buttons
programming feature settings 430
programming overlays 309
programming, system coordinator password 304
programming, viewing the settings 320
relocation 439
selecting lines for direct dial 448
set name 348
set relocation 293
set restrictions 354
user restrictions 104
telephones, programming a direct-dial number 458
temperature ICS 200
template
changing default 328
remote access package defaults 463
Startup 305
terminal endpoint identifier, see TEI
terminal endpoint identifiers, see TEI
terminal equipment
S or T wiring 294
U-LT jack pinout 296
U-LT wiring 296
terminal resistors 295
Terminals&Sets 335—360
capabilities 345
allow redirect 346
ATA settings 346
auxiliary ringer 346
d-dial 345
DND on busy 345
fwd no answer 345
fwd on busy 345
handsfree 345
HF answerback 345
hotline 346
page zone 345
paging 345
pickup grp 345
priority call 346
redirect ring 346
line access 335
answer DNs 342
intercom keys 341
line assignment 336
line pool access 339
OLI# 343
prime line 340
name 348
restriction filters 378
restrictions 349
user prefernces 348
voice messages 488
terminals&sets 331
terminating resistors, see termination for ISDN loop
termination for ISDN loop
description 240
shorting straps 241
testing
ISDN network connection 230
loopback tests 566
system test log 541
Tests 527
third party software, DNIS number 374
third-wire ground 202

through-fed repeaters, disable internal CSU 256
TI
CO fail 501
connecting wiring 258
framing 502
ISD/TT 502
TIA-547A
carrier failure standard 501
Tie
calling from within the network 180
calling other nodes within the network 181
CbC service 471
dialing plan 122
incoming calls 122
PRI lines 122
public call to private network 177
routing 390
routing table 393
time display, hospitality 479
time format, hospitality 479
time switches
time&date 331, 419
time, see AutoTime&Date
timeout
paging 435
timer
answer 500
disconnect, on card 500
times, service 479
timing master, clock source 517
timing reference, ClockSrc 505
T-loop, terminating resistors 240
toll calls over a private network 142
tones
hospitality 479
on hold 431
ONN blocking 470
paging 434
programming analog VSC 489
tools
programming 309
TR64211, carrier failure standard 501
transaction terminals 86
transfer callback 432
transmit
objective loudness 502
setting gain 375
transparent dialing plan, see also CDP
trnsfr callbk 432
TRO
SL-1 network
troubleshooting 587
alarms 551
ATA 606
auxiliary ringer 607
background music 608
DTI 612
emergency telephone 594
external paging 608
general procedure 590
line pools 631
lines 596—605
modules 611—614
network or remote users 621—634
optional equipment 606—608
replacing a telephone 593
T1 signal 614
telephones 592—595
trunk cartridge 611
trunk module 619
types of problems 589
voltages on E&M leads 626
trunk
BRI 97
cartridge
checking the state 539
number attached to a module 538
troubleshooting 611
changing trunk type 363
common data 363
dial mode 366
DID 91
DID, restrictions 92
disable cartridge 364
DTI 89
E&M 89, 93
ground start 90
loop start 89, 93
module troubleshooting 619
numbering 89
PRI 89, 97
prime set, overflow 368
programming received number 367
programming trunk mode 369
programming type 363

super, ans mode 369
tandeming, calling name information 468
types 89
trunk answer, programming 386
trunk antitromboning (TAT), MCDN 61, 128, 158
trunk cards
profile 1 323
profile 2 323
profile 3 324
profile 4 324
trunk cartridge
E&M wiriing chart 282
enable/disable for programming 504
installation planning 203
installing 239
line capacity 203
mixing in a Trunk module 203
port numbers 260
programming, disable/enable 364
trunk module, E&M/DISA 282
types 232
trunk mode
data settings 362
programming 369
trunk module
BRI-ST cartridge wiring 287
connecting 242
description 507
DID trunk cartridges and RJ-21 wiring connections 284
E&M network 115
emergency telephone installation 291
line number 223
power 301
trunk route optimization (TRO), MCDN 156
trunk route optimization, see TRO
trunk type 362
trunk/line data
copying 363
user interface 306
trunks
assigning physical trunks 336
CLASS 435
MICS-XC loop start compatibility 95
operating modes 90
programming analog VSC 489
programming if busy 367
set appearances 90
trunk type data settings 362
twelve-port Expansion Cartridge 247
twinning, hunt group 421
two-port expansion cartridge 245
type, BRI card loops 511

U

U interface 66
U-2 line numbers 507
U-4 line numbers 507
UDP
call routing 146
call scenarios 145
dialing plan features 450
location code 113
overview 112
private access codes 113
private DN length 113
SL-1 network features
U-LT
jack and plug pins 296
reference point 66
wiring chart 296
unassigned 167, 172, 336, 342
Unequipped 534
uninterruptible power supply (UPS) 199
universal dialing plan, see UDP
unknown name 467
unknown number 359
unsupervised, programming trunk mode 369
U-NT
network wiring 277
reference point 66
updates
viewing programming 314
upgrading
0X32 release 1-T1 209
8X24 219
call log information lost 208
from ILG to Hunt Groups 224
MICS to MICS-XC 214
Modular 8X24 Key Service Unit (KSU) 209

software upgrade before hardware upgrade 207
supported upgrades 208
U.S. MICS-XC systems lose UTAM information 208
upgrading system 207—223
Usage metrics
call by call 584
Hunt groups 583
usage metrics
top level 332
user interface 306
use pool 392
use set volume 431
use sys volume 431
user call restrictions 378
user filter, line/set restriction 413
user preferences
listing 306
programming 315, 348
user restrictions 378
set 104
user speed dial
user prefernces 348

V

vacancy, room 478
ventilation
ICS 200
version number, check device 533
vertical service code, see VSC
videoconferencing and video using ISDN applications 193
videophones, hunt groups 421
view 313
view prefix 454
viewing
assigned lines 338
long telephone numbers 314
programming for a telephone 320
programming updates 314
VMsg center 380
VMsg ctr tel#s 306, 487
voice mail
external access 358
on SL-1 network 128
voice message
accessing 358
external center 487
programming 380
telephone setting 488
waiting indication 358
voice, call type 513
volume, system or set 431
VSC
ONN SrvcCode 490
programming for BRI 489
setting up the modules 490
VSC, analog vertical service code for ONN blocking 489

W

wait for dial tone, dialout 392
wakeup 225
warm start 301
wild card
destination codes 396
dialing restrictions 352
wild cards
destination code 396
WinkStart signal type 373
wireless
hunt group twinning 421
wiring
auxiliary ringer 297
BRI-ST 270, 271
BRI-U 273, 275
connecting 255
cross-connect 255
ICS 269—278
ISDN S loop 204
loopback test 566
modules 259
requirements 204
wiring chart
auxiliary equipment 265
BRI 269—274
BRI trunk module 287—289
BRI-ST cartridge 287
BRI-ST wiring 270, 271
DID trunk cartridge 284
DTI 278
E&M trunk cartridge 282
E&M/DISA trunk cartridge 282
ICS external loop start lines 267, 268

ICS telephone 264, 265
loop start or CI trunk 280
port numbering 260
S or T extension wiring 295
S or T terminal equipment 294
station module 279
T network connection 276
trunk module with DID trunk cartridge 285
trunk modules with E&M/DISA 282
U-LT terminal equipment 296
U-NT network 277

X

X.25, converting ISDN protocol 87

Z

Z, dialpad 304, 326
zero absorb length 402